AGREEMENT FOR
TROMMEL SCREENING RENTAL SERVICES
PROVIDED BY THE TOWN OF NEEDHAM

THIS AGREEMENT for trommel screening rental services is made this _____ day of _____ 20____, by and between the Town of Needham, a municipal corporation duly organized under the laws of the Commonwealth of Massachusetts, hereinafter the "Town of Needham" or "LESSOR" and _____, a corporation organized under the laws of the Commonwealth of Massachusetts with a usual place of business at _____, hereinafter the "LESSEE".
(address, city, state & zip code)

THEREFORE, in consideration of the foregoing and the mutual promises contained herein, and intending to be legally bound by this Agreement, the parties hereto agree as follows:

SCOPE OF THE AGREEMENT

The Town of Needham will provide Trommel Screening Rental Services at a weekly rate. This service will consist of delivering the Trommel Screener to the LESSEE and picking up the Trommel Screener when service is complete (See Attachment I). Additionally, when the LESSEE requires multi-week service, the Town of Needham will provide weekly preventative maintenance and inspection service.

EQUIPMENT INCLUDED IN THE AGREEMENT

The equipment covered by this Agreement is a MCB 512R Trommel Screener, hereinafter the "Screener", which will be stored and transported by the Town of Needham.

TERM OF THE AGREEMENT

This Agreement shall be in effect for a period of one (1) year, subject to the termination right of each party as provided herein. This Agreement may be extended in one (1) year intervals at the sole discretion of the LESSOR.

COSTS AND CHARGES

The LESSEE will be charged the full week rate for each week the Screener is utilized (See Attachment I, Needham Trommel Screening Rental Services Rate and Contact Sheet for all rates and fees).

If the Screener should experience mechanical problems and the screening operation is discontinued, the LESSEE will only be charged for actual time used. Time will be prorated according to the hour meter.

The Town of Needham reserves the right to assess rental rates on an annual basis and adjust the rates if needed to maintain the operational readiness of the Screener.

PAYMENT

Payment for Trommel Screening Rental services are due thirty (30) day from receipt of invoice.

TERMINATION AND DEFAULT

Each party may terminate its participation in this Agreement so long as at least sixty (60) days prior to its termination it gives written notice to the other party. The LESSEE may be declared in default of this Agreement by the Town of Needham if its financial obligation to the Town of Needham has not been satisfied within ninety (90) days of trommel screening rental services having been rendered or the conditions of this Agreement have not been met.

The Town of Needham reserves the right to deny the rental of the Screener to the LESSEE if it has demonstrated operational negligence or inappropriate use or application of the Screener.

REPAIRS AND MAINTENANCE

The Town of Needham, their employees, designees or contractors shall perform all repairs and maintenance of equipment. The Town of Needham shall keep records available for inspection by the LESSEE as to the repair and maintenance of the equipment.

INSURANCE

All equipment shall at all times that this Agreement is in effect be insured for fire, theft, damage or injuries to person or property and all other liability by the Town of Needham.

Only employees of the LESSEE, who have been instructed by the Town of Needham, shall operate equipment covered by this Agreement. The LESSEE shall, at its own expense, obtain and maintain general liability and motor vehicle liability insurance policies protecting the Town of Needham in connection with any operations included in this Agreement. Coverage shall be in the amount of at least $1,000,000 per occurrence, and $3,000,000 aggregate for bodily injury liability and $1,000,000 per occurrence, and $3,000,000 aggregate property damage liability.

The LESSEE, shall before commencing performance of this Agreement, provide by insurance for the payment of compensation and the furnishing of other benefits in accordance with Massachusetts General Laws, Chapter 152, as amended, to all employed under the Agreement and shall continue such insurance in full force and effect during the term of the Agreement.

The LESSEE shall indemnify, defend, and save harmless the Town of Needham and all of the Town of Needham's officers, agents and employees from and against all suits and claims of liability of every name and nature, including costs of defending any action, for, or on account of, any injuries to persons or damage to property of the Town of Needham or any person, firm, corporation or association arising out of or resulting from any act, omission, or negligence of the LESSEE and/or its agents or employees in the performance of the work covered by this Agreement and/or failure to comply with terms and conditions of this Agreement, but only in respect of such injuries or damages sustained during the performance of the work covered by this Agreement.

SCHEDULE FOR USE

The LESSEE shall agree to a schedule or system for use including emergency use of the Screener on an as needed basis. These schedules or systems may be amended pending availability of the trommel screener or pending scheduled maintenance.

BINDING AGREEMENT AND ASSIGNMENT OF INTEREST

This Agreement shall be binding upon the LESSOR and the LESSEE and the partners, successors, heirs, executors, administrators, assigns and legal representatives of both parties. Neither the LESSOR nor the LESSEE shall assign, sublet or transfer any interest in this Agreement without the written consent of each other, and such consent shall not be unreasonably withheld.

CERTIFICATE OF COMPLIANCE WITH MASSACHUSETTS TAX LAWS

Pursuant to Mass. Gen. Laws, Chapter 62C, Section 49A: I certify under the pains and penalties of perjury that the LESSEE, to my best knowledge and belief, has filed all state tax returns and paid all state taxes required under the law, and that I am in compliance with all laws of the Commonwealth of Massachusetts relating to taxes, reporting of employees and contactors, and withholding and remitting child support.

_____
Social Security Number or
Federal Identification Number

_____
Signature of Individual or Corporate Name

Dated: _____

BY: _____
Corporate Officer (if applicable)

SIGNATURES

Signed and Sealed this _____ day of _____, 20____.

By the TOWN OF NEEDHAM:

_____
Richard P. Merson, Director
Department of Public Works

– and –

LESSEE: _____

Address: _____

City, State & Zip Code:_____

Authorized Agent(s): _____

Title:_____

Phone #_____Fax #_____Email: _____

Attachment I

NEEDHAM TROMMEL SCREENING RENTAL SERVICES RATE AND CONTACT SHEET

CONTACT:	Greg Smith, Supt., Solid Waste & Recycling Division Recycling & Transfer Station 1421 Central Avenue Needham, MA 02492 Cell: (781) 801-6835 Email: gsmith@needhamma.gov
RENTAL PRICE:	$2,500. per week PLUS fuel Based on 40 hour week (Hour Meter Recorded). Additional hours over 40 hours per week will be pro-rated based on hour meter reading. For all rentals beyond one week, the Town of Needham will provide weekly inspections and preventative maintenance.
TRANSPORTATION COST:	$200. Covers transportation to and from LESSEE'S usual place of business. Upon delivery and pickup of the Trommel Screener, the LESSEE and a Needham representative will perform a joint inspection.
AVAILABLE SCREEN DRUMS:	¾" minus Drum, or ½" minus Drum.
MATERIALS ACCEPTED:	Composted organics (Brush, Grass, Leaves) no larger than 4" minus. Soil material no greater than 2" minus. **NO LOGS OR LARGE STONES**
SCHEDULING:	On-call basis.
EQUIPMENT INSURANCE:	Included in processing fee.
DEDICATED OPERATOR:	Provided by LESSEE and Instructed by Town of Needham. Dedicated operator is required to have a valid Department of Public Safety Hoisting Engineers License – 2C minimum. Dedicated operator will be required to perform inspections of the Trommel Screener twice daily (At startup and after lunch) and record any recognizable deficiencies (See Attachment II; Trommel Daily Inspection Report).
PROCESSING SITE:	At LESSEE'S usual place of business or elsewhere by arrangement.

Attachment I - continued

SITE VISITS:	LESSEE should assess processing sites and materials to be processed; Needham officials will answer any additional questions.
MAINTENANCE/REPAIR:	Preventative maintenance and parts replacement due to normal operational wear will be provided by Town of Needham; costs covered in service price.
EQUIPMENT DAMAGE:	LESSEE will be responsible for all damages to Trommel Screener due to operator error or negligence, including damages caused by the introduction of oversized or unacceptable material into the Trommel Screener.

Attachment II

The Town of Needham
Department of Public Works
Recycling& Transfer Station
1421 Central Avenue
Needham, MA 02492
PH: (781) 455-7584

TROMMEL SCREENER
DAILY INSPECTION REPORT

Location (address) of Screener:_____
LESSEE (Renter): _____

Date: _____ Hour Meter Reading: _____ Time: _____ AM PM

Inspected by:_____**Title:**_____

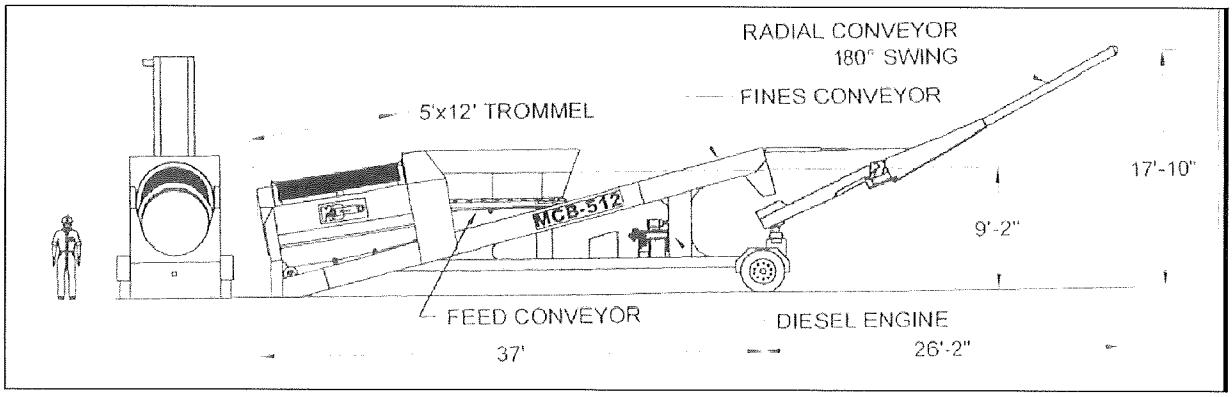

Description	Yes	No	Noted Damage:
Fuel Level			
Engine Coolant			
Engine Oil Level			
Hydraulic Oil level			
Conveyor Belts			
Need Grease (Every 40 Hrs.)			
Photo Taken?			

Attachment II - continued

Additional Notes or Comments:

Notes: