Comprehensive Permit Plans
Modera Needham Residential Development
692 & 744 Greendale Avenue - Needham, MA

100 Nickerson Road
Marlborough, MA 01752
PHONE: (508) 786-2201 FAX: (508) 786-2200
www.tetratech.com

TETRA TECH

SITE CONTEXT MAP

0 100' 200' 400'
SCALE: 1"=200'

LEGEND

EXISTING		PROPOSED
210X23	SPOT GRADE	140X50
	TOP OF WALL ELEVATION	123.5TW
	BOTTOM OF WALL ELEVATION	120.0BW
136	CONTOUR	136
CB	CONCRETE BOUND	
SB	STONE BOUND	
DH	DRILL HOLE	
	LIGHT POLE	
	UTILITY POLE	
WV	WATER VALVE	
ST	DRAIN LINE	SD
SS	SEWER LINE	SS
G	GAS LINE	G
	UNDERGROUND ELECTRIC	E/T/C
W	WATER LINE	W
OE	OVERHEAD WIRES	OE
CB	CATCH BASIN	CB
	FLARED END OUTLET	
DMH	DRAIN MANHOLE	DMH
SMH	SEWER MANHOLE	SMH
	HYDRANT	
GG	GAS GATE	
MW	MONITORING WELL	
	TEST PIT	
	BOLLARD	
VGC	VERTICAL GRANITE CURB	VGC
CC	CONCRETE CURB	CC

DRAWING LIST:

C-0 COVER SHEET
C-1 PLOT PLAN
C-2 LAYOUT PLAN
C-3 GRADING & DRAINAGE PLAN
C-4 UTILITY PLAN
C-5 EROSION & SEDIMENT CONTROL PLAN
C-6 DETAIL SHEET
C-7 DETAIL SHEET
C-8 DETAIL SHEET
C-9 DETAIL SHEET
C-10 DETAIL SHEET

ZONING ANALYSIS: DISTRICT - SINGLE RESIDENCE A

ITEM	REQUIRED	PROVIDED
MINIMUM LOT AREA	43,560 S.F.	262,175 S.F.
MINIMUM LOT FRONTAGE	150'	616'
FRONT SETBACK	30'	30.0'
SIDE SETBACK	25'	25.0'
REAR SETBACK	15'	72.1'
MAXIMUM F.A.R.	NO REQUIREMENT	1.11
MAXIMUM % LOT COVERAGE	NO REQUIREMENT	22.2%
MAXIMUM STORIES	2 1/2	Building A - 5 Townhouse - 2
MAXIMUM HEIGHT	35' (ROOF RIDGE ELEV. TO AVERAGE GRADE)	Building A - 77' Townhouse - 41.2'

UNIT DENSITY SUMMARY

NUMBER OF UNITS	136
LOT AREA (ACRES)	6.02
UNITS/ACRE	22.6

LOT COVERAGE SUMMARY

ITEM	AREA (SF)	% OF LOT AREA
LOT AREA	262,175	N/A
PROVIDED BUILDING FOOTPRINT AREA	58,740	22.2%
PROVIDED DRIVEWAY & PARKING AREAS	83,756	31.9%
PROVIDED SIDEWALK AREA	20,817	7.9%
PROVIDED OPENSPACE	98,862	38.0%

PARKING SUMMARY - 136 DWELLING UNITS

	PARKING RATIO
REQUIRED NUMBER OF PARKING SPACES	1.5 SPACES PER DWELLING UNIT=204 (SEE NOTE 1)
PROVIDED NUMBER OF PARKING SPACES	1.95 SPACES PER DWELLING UNIT = 265 SPACES
-STANDARD SURFACE SPACES	57
-COMPACT SURFACE SPACES	16
-HC SURFACE SPACES	4
-TOWNHOUSE SPACES (2 PER UNIT)	104
-PARKING GARAGE SPACES	81
-HC PARKING GARAGE SPACES	3
REQUIRED NUMBER OF BIKE STORAGE AREAS	1 PER 20 PARKING SPACES = 13.25
PROVIDED NUMBER OF BIKE STORAGE AREAS	14

APPLICANT:
GREENDALE AVENUE VENTURE LLC
C/O MILL CREEK RESIDENTIAL TRUST, LLC
200 WHEELER ROAD
BURLINGTON, MA 01803
TEL: 339-298-3969

PROJECT ATTORNEY:
GOULSTON & STORRS
400 ATLANTIC AVENUE
BOSTON, MA 02110
TEL: 617-482-1776

ARCHITECT:
THE ARCHITECTURAL TEAM
50 COMMANDANT'S WAY AT ADMIRAL'S HILL
CHELSEA, MA 02150
TEL: 617-889-4402

LANDSCAPE ARCHITECT:
STANTEC
141 PORTLAND STREET
BOSTON, MA 02114
TEL: 617-523-8103

TRAFFIC ENGINEER:
VANASSE & ASSOCIATES, INC.
10 NEW ENGLAND BUSINESS CENTER DRIVE
ANDOVER, MA 01810
TEL: 978-474-8800

PROJECT LOCATION:
692 & 744 Greendale Avenue
Needham, MA

Tt PROJECT No.:
143-82806-15001

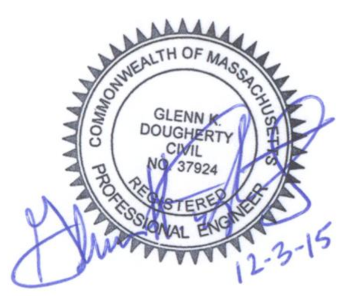

DATE: October 22, 2015

October 28, 2015 REVISED PER TOWN ENGINEER'S COMMENTS
December 3, 2015 REVISED PER TOWN ENGINEER'S COMMENTS

USGS MAP:

0 1000' 2000' 4000'
SCALE: 1" = 2000'

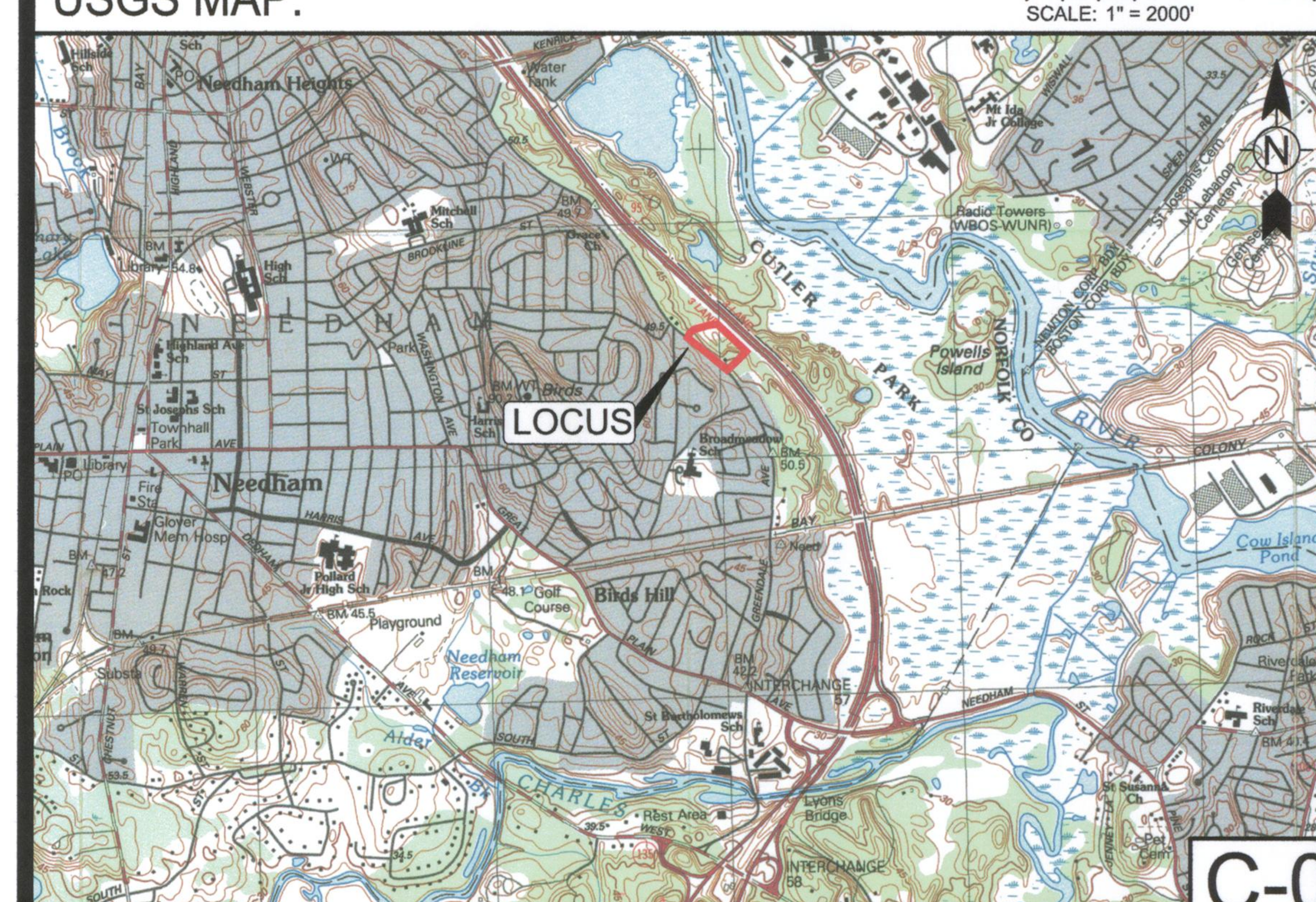

C-0

8/6/2012 10:05 AM - P:\82806\143-82806-15001\CAD\SheetFiles\136 UNIT DESIGN\C-0 Cover.DWG - PAPPAS, JUD

PLAN REFERENCES

"PLAN OF LAND NEEDHAM, MASS." DATED JAN. 3, 2002 PREPARED BY NEEDHAM SURVEY ASSOCIATES, INC. (ANR PLAN ENDORSED BY THE NEEDHAM PLANNING BOARD 1-22-2002, PLAN NOT RECORDED AT THE REGISTRY OF DEEDS)

"PLAN OF LAND NEEDHAM---MASS." DATED JUNE 10, 2000 PREPARED BY NEEDHAM SURVEY ASSOCIATES, INC. (ANR PLAN ENDORSED BY THE NEEDHAM PLANNING BOARD 6-6-2000, PLAN NOT RECORDED AT THE REGISTRY OF DEEDS)

"TOWN OF NEEDHAM, MASS DEPT. OF PUBLIC WORKS, EASEMENT TO BE ACQUIRED IN NEEDHAM, MASS., GREENDALE AVE TO ROUTE 128" DATED JUNE 1959.

"PLAN OF LAND IN NEEDHAM, MASS." DATED SEPT. 18, 1937 BY E. WORTHINGTON ENGINEER. PLAN BOOK 2159 PAGE 225.

"PLAN OF LAND IN NEEDHAM, MASS SHOWING DRAIN EASEMENT TO BE ACQUIRED BY THE TOWN", DATED OCTOBER 26, 1990 BY CHENEY ENGINEERING CO., INC., PLAN BOOK 395 NO. 791-1990.

STATE LAYOUT NO. 4548, 1957 DISCONTINUANCE OF STATE HIGHWAY ON GREENDALE AVENUE.

"PLAN OF LAND IN NEEDHAM, MASS." DATED JULY 20, 1961 BY CHENEY ENGINEERING CO., PLAN NO. 13 OF 1962 PLAN BOOK 3957 PAGE 484.

STATE LAYOUT NO. 4062, 1953 ALTERATION ROUTE 128

LOCUS INFORMATION

ASSESSORS MAP 18 PARCELS 42, 43 & 44

LOCUS IS WITHIN FEMA FLOOD ZONE X
AS SHOWN ON COMMUNITY PANEL #25021C0037E
DATED JULY 17, 2012.

ZONING SUMMARY

ZONING DISTRICT: SRA SINGLE RESIDENCE A

MIN. LOT SIZE	43,560 S.F.
MIN. LOT FRONTAGE	150'
MIN. FRONT SETBACK	30'
MIN. SIDE SETBACK	25'
MIN. REAR SETBACK	15'
MAX. BUILDING HEIGHT	35'

OWNERS OF RECORD

ASSESSORS MAP 18, PARCELS 43 & 44
VINCENT P. & MARY D. BORIS
692 GREENDALE AVENUE
NEEDHAM, MA 02192

ASSESSORS MAP 18, PARCELS 42
CHRISTOPHER A. MacDONALD
744 GREENDALE AVENUE
NEEDHAM, MA 02192

REFERENCE

ASSESSORS MAP 18, PARCELS 43 & 44
DEED BOOK 2985 PAGE 600

ASSESSORS MAP 18, PARCEL 42
DEED BOOK 2473 PAGE 329

LEGEND

UTILITY POLE	
WATER VALVE	WV
FIRE HYDRANT	
BENCHMARK	
CATCH BASIN	CBN
SEWER MANHOLE	SMH
GAS VALVE	GV
DRAIN MANHOLE	DMH
NOW OR FORMERLY	N/F
EXISTING SPOT ELEVATION	× 161.7
EXISTING CONTOUR	150
OVERHEAD WIRES	OE
WATER LINE	W
GAS LINE	G
SANITARY SEWER	SS
STORM DRAIN	SD

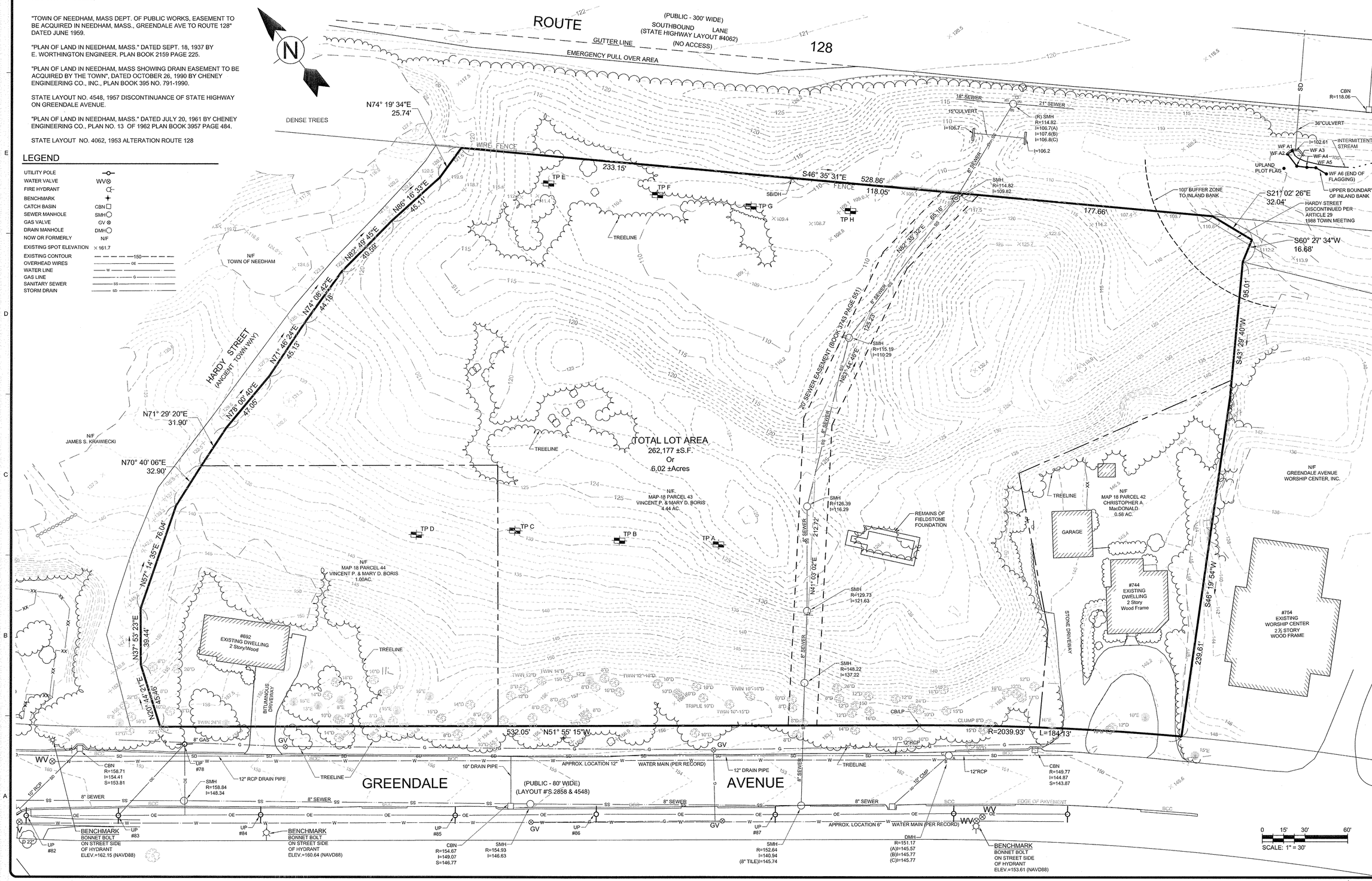

Bar Measures 1 inch

TETRA TECH
www.tetratech.com
One Grant Street
Framingham, MA 01701
PHONE: (508) 903-2000 FAX: (508) 903-2001

COMMONWEALTH OF MASSACHUSETTS
ROBERT F. DAYLOR
No. 20109
REGISTERED PROFESSIONAL LAND SURVEYOR
SEAL AND SIGNATURE

MARK	DATE	DESCRIPTION	BY
1	4/12/13	Site Development Plans	G.K.D.
2	9/16/13	ZBA Submission Set	G.K.D.
3	9/30/13	ZBA Submission Full Set	G.K.D.
4	11/8/13	Revisions Per Town Comments	G.K.D.

Client: Greendale Avenue Ventures LLC
Proj. Loc.: Needham, Massachusetts

Comprehensive Permit Plans
692 & 744 Greendale Avenue - Needham, Massachusetts

Plot Plan

Project No.:	143-82806-13003
Designed By:	G.K.D.
Drawn By:	J.L.P.
Checked By:	R.D.A

C-1

Copyright: Tetra Tech

11/6/2013 3:02:25 PM - P:\82806\143-82806-13003\CAD\SHEETFILES\C-1 TOPOGRAPHIC PLAN OF LAND.DWG - PAPPAS, JUD

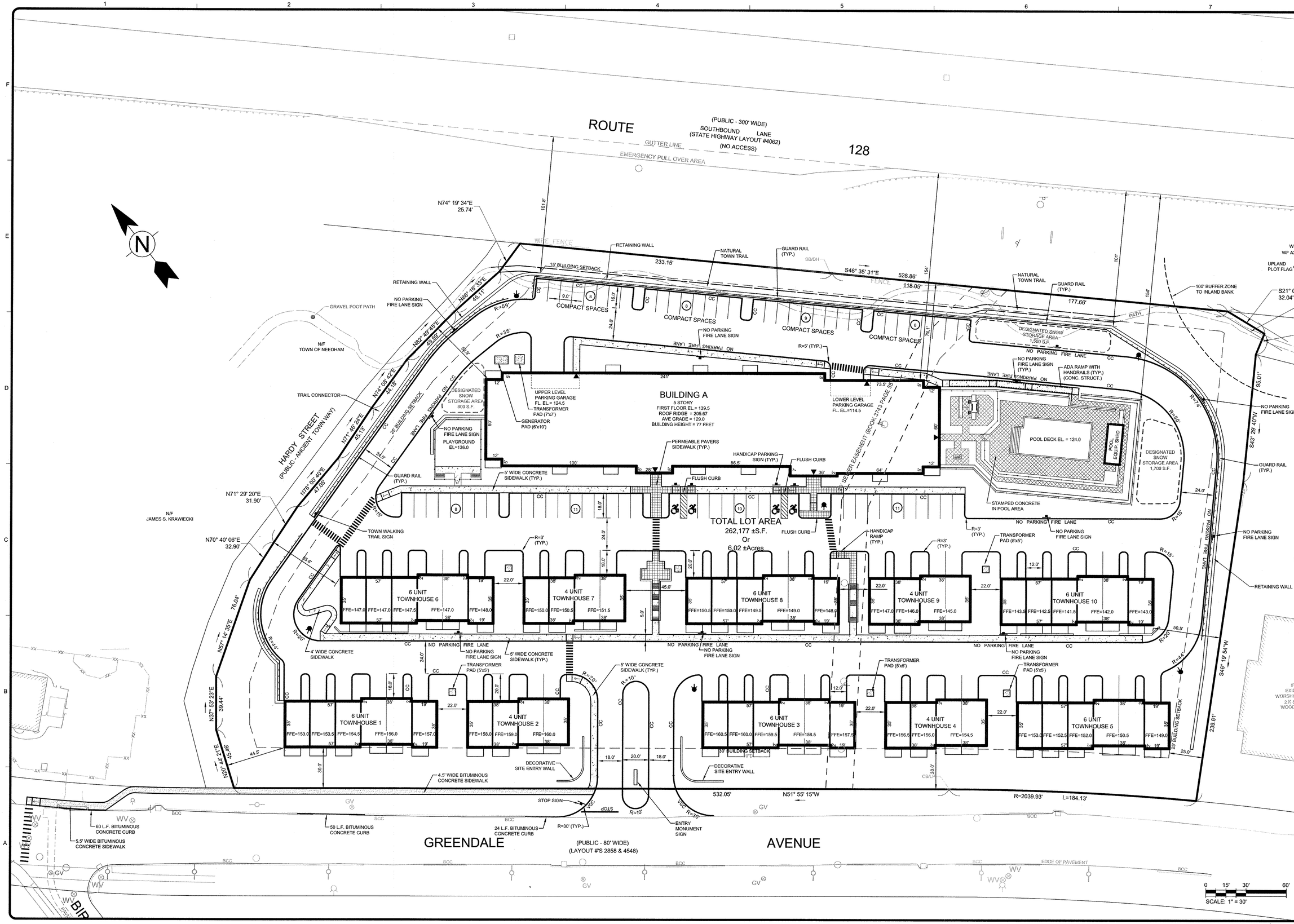

TETRA TECH
www.tetratech.com
100 Nickerson Road
Marlborough, MA 01752
PHONE: (508) 786-2200 FAX: (508) 786-2201

COMMONWEALTH OF MASSACHUSETTS
GLENN K. DOUGHERTY
No. 37924
REGISTERED PROFESSIONAL ENGINEER
12-3-15

MARK	DATE	DESCRIPTION	BY
1	10-22-15	COMPREHENSIVE PERMIT FILING	
2	10-28-15	REVISED PER TOWN ENGINEER'S COMMENTS	
3	12-3-15	REVISED PER TOWN ENGINEER'S COMMENTS	

Client: Greendale Avenue Venture LLC
Proj. Loc.: Needham, Massachusetts

Comprehensive Permit Plans
692 & 744 Greendale Avenue - Needham, Massachusetts

Layout Plan

Project No.:	143-82806-15001
Designed By:	G.K.D.
Drawn By:	J.L.P.
Checked By:	G.K.D.

C-2

Copyright: Tetra Tech

12/3/2015 9:45:25 AM - P:\82806\143-82806-15001\CAD\SHEETFILES\136 UNIT DESIGN\C-2 LAYOUT PLAN.DWG - PAPPAS, JUD

Bar Measures 1 inch

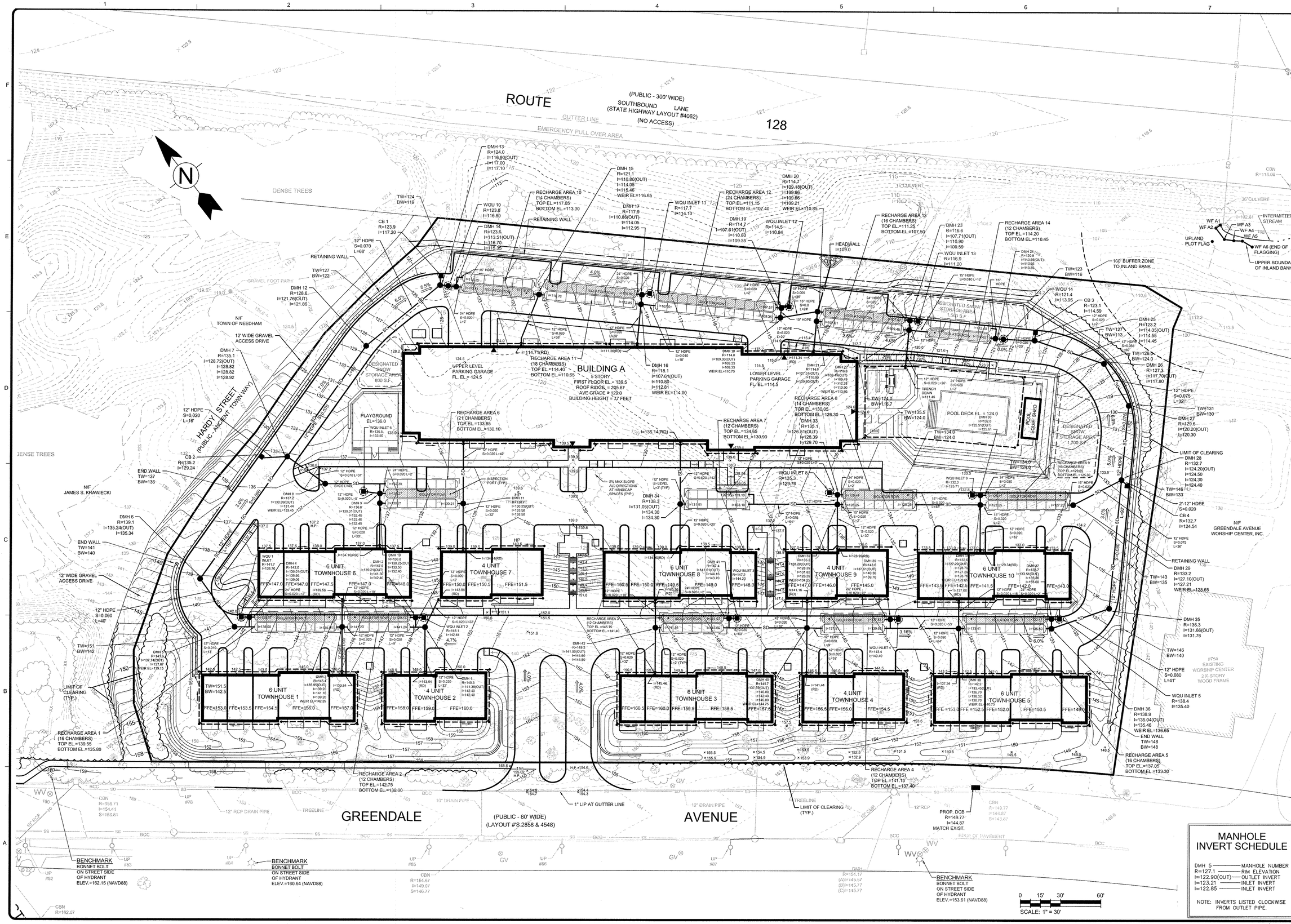

MANHOLE INVERT SCHEDULE

DMH 5 — MANHOLE NUMBER
R=127.1 — RIM ELEVATION
I=122.90(OUT) — OUTLET INVERT
I=123.21 — INLET INVERT
I=122.85 — INLET INVERT

NOTE: INVERTS LISTED CLOCKWISE FROM OUTLET PIPE.

TETRA TECH
www.tetratech.com
100 Nickerson Road
Marlborough, MA 01752
PHONE: (508) 786-2200 FAX: (508) 786-2201

COMMONWEALTH OF MASSACHUSETTS
GLENN J. DOUGHERTY
CIVIL
37924
REGISTERED PROFESSIONAL ENGINEER
12-3-15

MARK	DATE	DESCRIPTION	BY
1	10-22-15	COMPREHENSIVE PERMIT FILING	
2	10-28-15	REVISED PER TOWN ENGINEER'S COMMENTS	
3	12-3-15	REVISED PER TOWN ENGINEER'S COMMENTS	

Client: Greendale Avenue Venture LLC
Proj. Loc.: Needham, Massachusetts

Comprehensive Permit Plans
692 & 744 Greendale Avenue - Needham, Massachusetts

Grading & Drainage Plan

Project No.:	143-82806-15001
Designed By:	G.K.D.
Drawn By:	J.L.P.
Checked By:	G.K.D.

C-3

Copyright: Tetra Tech

Bar Measures 1 inch

12/3/2015 10:33:47 AM - P:\82806\143-82806-15001\CAD\SHEETFILES\136 UNIT DESIGN\C-3 GRADING & DRAINAGE PLAN.DWG - PAPPAS, JUD

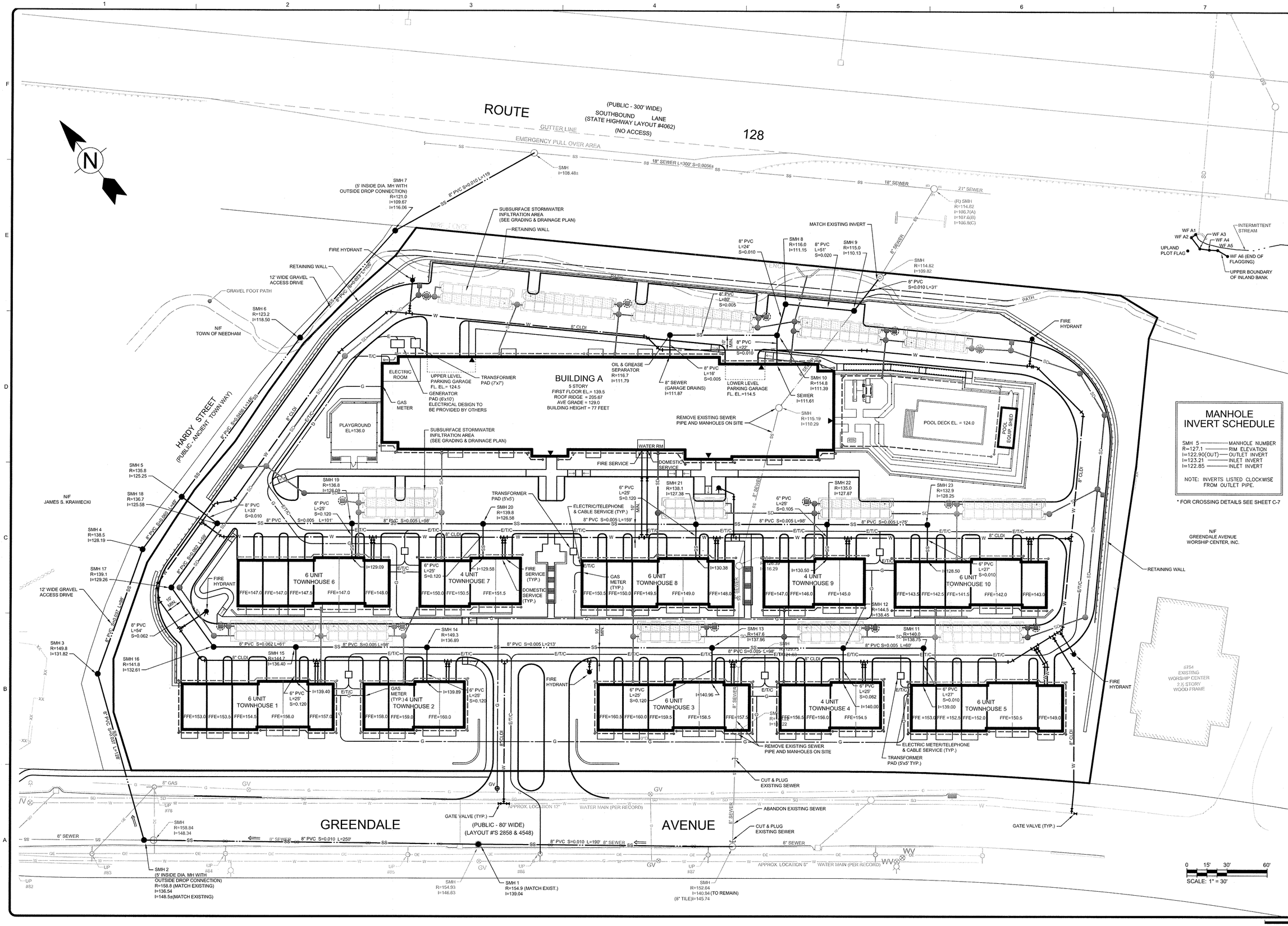

MANHOLE INVERT SCHEDULE

SMH 5 — MANHOLE NUMBER
R=127.1 — RIM ELEVATION
I=122.90(OUT) — OUTLET INVERT
I=123.21 — INLET INVERT
I=122.85 — INLET INVERT

NOTE: INVERTS LISTED CLOCKWISE FROM OUTLET PIPE.

* FOR CROSSING DETAILS SEE SHEET C-7

TETRA TECH
www.tetratech.com
100 Nickerson Road
Marlborough, MA 01752
PHONE: (508) 786-2200 FAX: (508) 786-2201

COMMONWEALTH OF MASSACHUSETTS — GLENN K. DOUGHERTY — CIVIL — NO. 34054 — REGISTERED PROFESSIONAL ENGINEER — 12-3-15

MARK	DATE	DESCRIPTION	BY
1	10-22-15	COMPREHENSIVE PERMIT FILING	
2	10-28-15	REVISED PER TOWN ENGENEER'S COMMENTS	
3	12-3-15	REVISED PER TOWN ENGENEER'S COMMENTS	

Client: Greendale Avenue Venture LLC
Proj. Loc.: Needham, Massachusetts

Comprehensive Permit Plans
692 & 744 Greendale Avenue - Needham, Massachusetts

Utility Plan

Project No.:	143-82806-15001
Designed By:	G.K.D.
Drawn By:	J.L.P.
Checked By:	G.K.D.

C-4

Copyright: Tetra Tech

Bar Measures 1 inch

12/3/2015 10:46:05 AM - P:\82806\143-82806-15001\CAD\SHEETFILES\136 UNIT DESIGN\C-4 UTILITY PLAN.DWG - PAPPAS, JUD

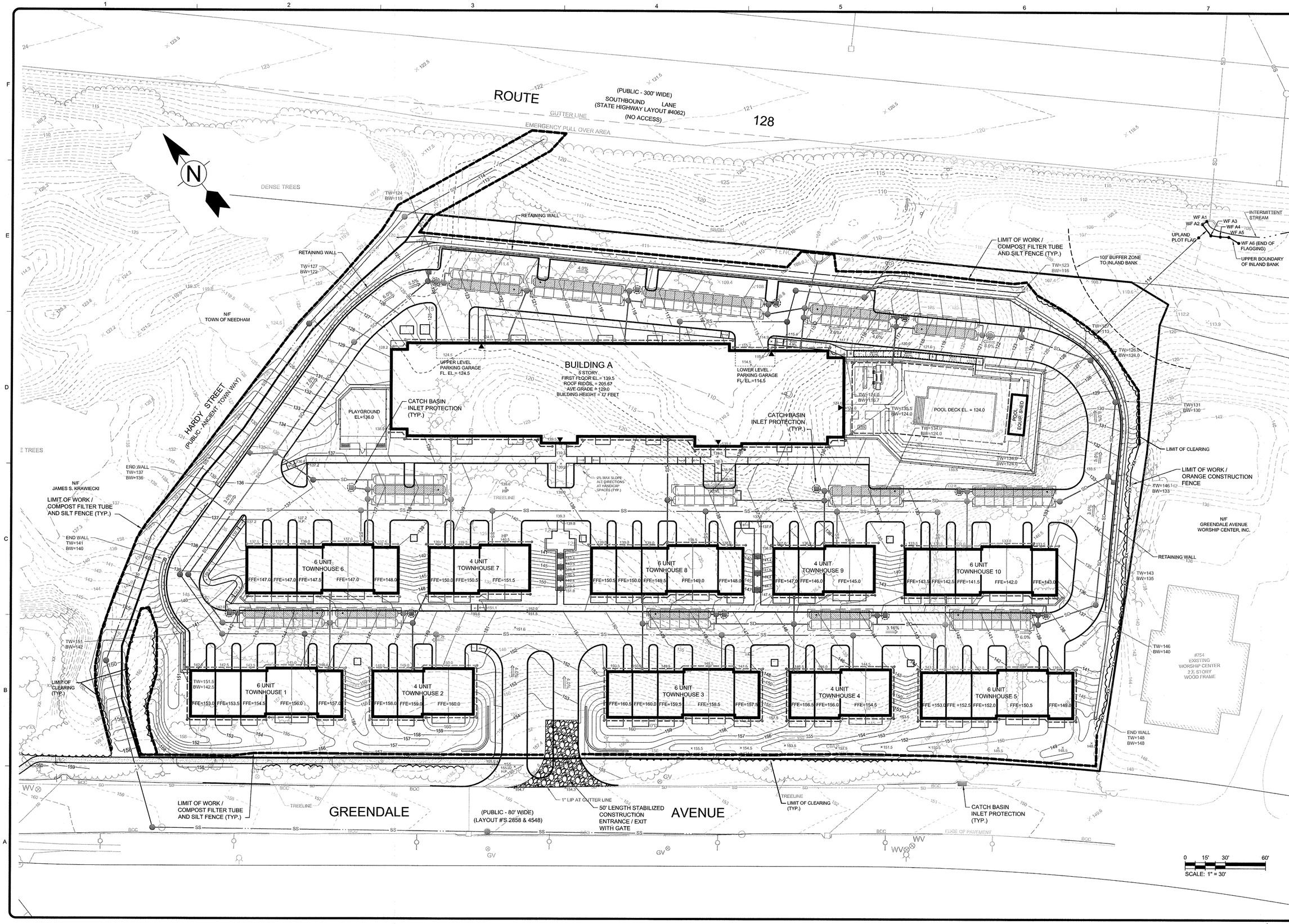

TETRA TECH
www.tetratech.com
100 Nickerson Road
Marlborough, MA 01752
PHONE: (508) 786-2200 FAX: (508) 786-2201

COMMONWEALTH OF MASSACHUSETTS
GLENN K. DOUGHERTY
CIVIL
NO. 37927
REGISTERED PROFESSIONAL ENGINEER
12-3-15

MARK	DATE	DESCRIPTION	BY
1	10-22-15	COMPREHENSIVE PERMIT FILING	
2	10-28-15	REVISED PER TOWN ENGENEER'S COMMENTS	
3	12-3-15	REVISED PER TOWN ENGENEER'S COMMENTS	

Client: Greendale Avenue Venture LLC
Proj. Loc.: Needham, Massachusetts

Comprehensive Permit Plans
692 & 744 Greendale Avenue - Needham, Massachusetts

Erosion & Sediment Control Plan

Project No.:	143-82806-15001
Designed By:	G.K.D.
Drawn By:	J.L.P.
Checked By:	G.K.D.

C-5

Copyright: Tetra Tech

Bar Measures 1 inch

12/3/2015 10:25:57 AM - P:\82806\143-82806-15001\CAD\SHEETFILES\136 UNIT DESIGN\C-5 EROSION CONTROL PLAN.DWG - PAPPAS, JUD

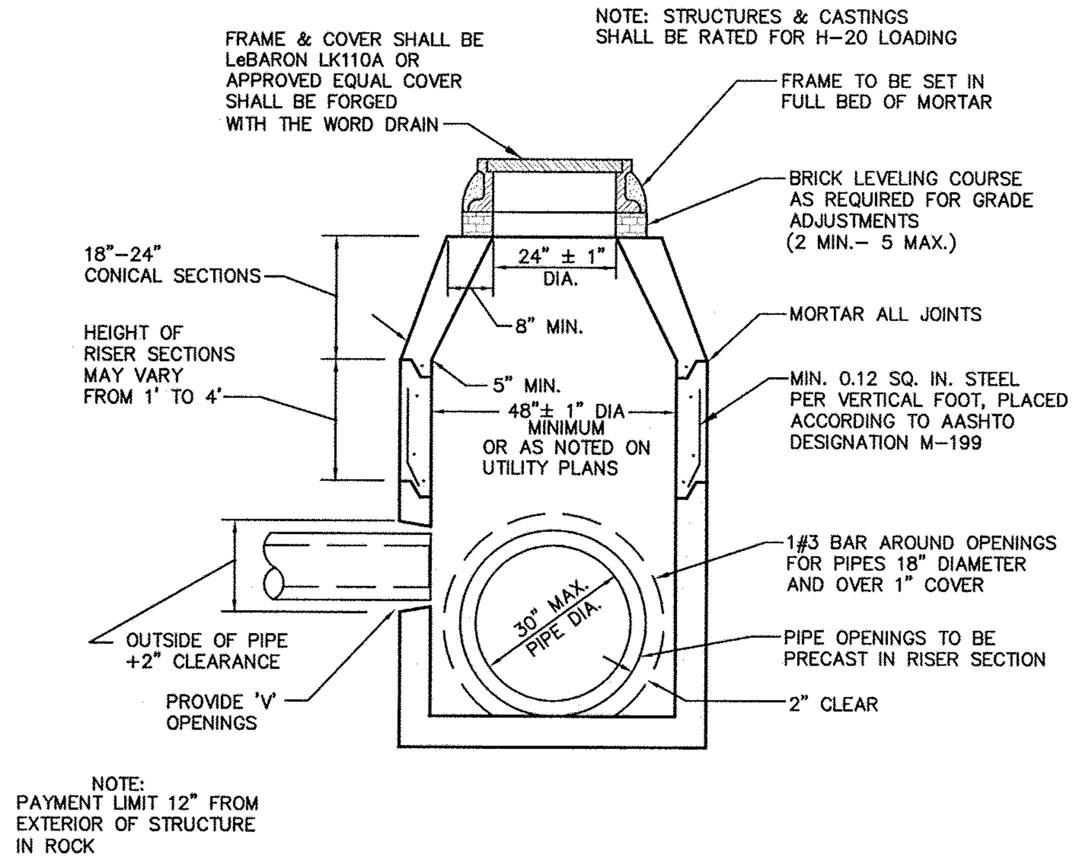

NOTE:
PAYMENT LIMIT 12" FROM EXTERIOR OF STRUCTURE IN ROCK

NOTES:
1. MANHOLE DIAMETER TO BE INCREASED AS REQUIRED TO ACCOMMODATE NUMBER OF PIPES ENTERING OR DISCHARGING FROM MANHOLE.
2. STRUCTURE OPENING VOIDS, AFTER PIPE INSTALLATION, SHALL BE FILLED WITH NON-SHRINK WATERPROOF GROUT. GROUT TO BE COMPLETELY AROUND THE PIPE. GROUT SHALL BE SMOOTH AND PARALLEL TO INTERIOR AND EXTERIOR WALLS.

NOTES:
1. CONCRETE = 4000 PSI MINIMUM, CEMENT PER ASTM C-478
2. MANHOLE TO CONFORM TO LATEST ASTM C-478 SPECIFICATIONS FOR "PRECAST REINFORCED CONCRETE MANHOLE SECTIONS"
3. STEEL REINFORCEMENT TO MEET OR EXCEED H20 LOADING.
4. MANHOLE STEPS – POLYPROPYLENE COATED GRADE 60 REINFORCING BAR, PER ASTM C-478 & OSHA (STD 1-1.9)

PRECAST CONCRETE DRAIN MANHOLE

9 FEET OR LESS IN DEPTH
NOT TO SCALE

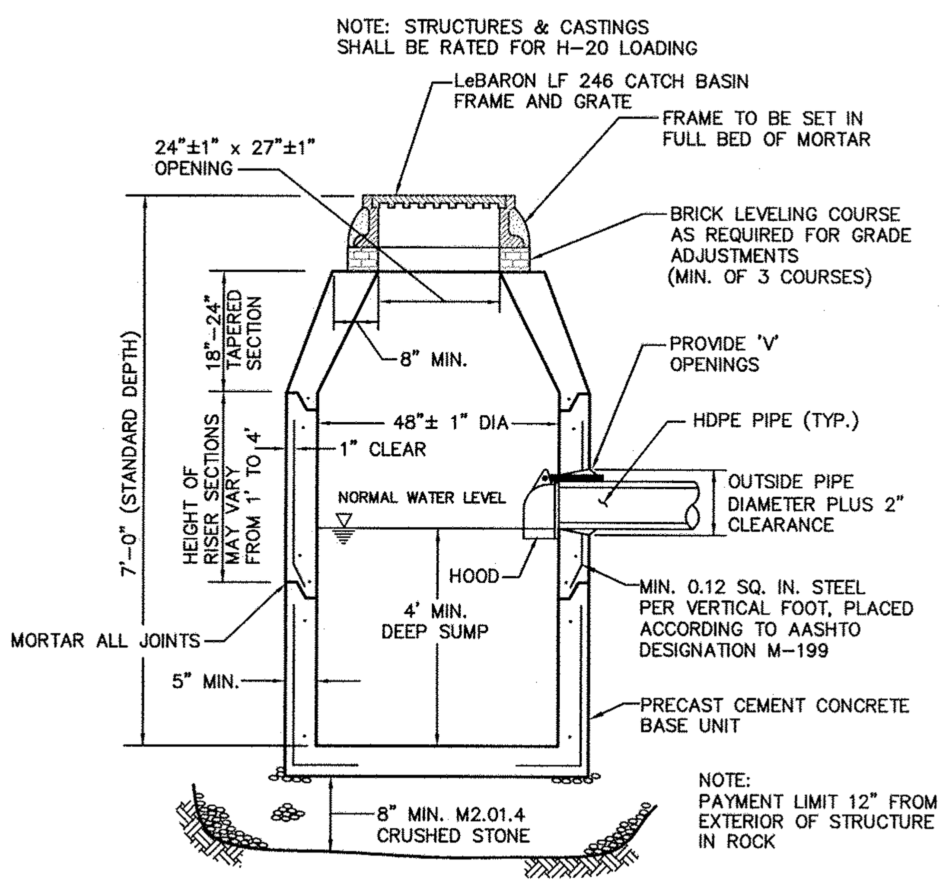

PRECAST CONCRETE CATCH BASIN

NOT TO SCALE

NOTES:
1. CONCRETE = 4000 PSI MINIMUM, CEMENT PER ASTM C-478
2. MANHOLE TO CONFORM TO LATEST ASTM C-478 SPECIFICATIONS FOR "PRECAST REINFORCED CONCRETE MANHOLE SECTIONS"
3. STEEL REINFORCEMENT TO MEET OR EXCEED H20 LOADING.
4. MANHOLE STEPS – POLYPROPYLENE COATED GRADE 60 REINFORCING BAR, PER ASTM C-478 & OSHA (STD 1-1.9)

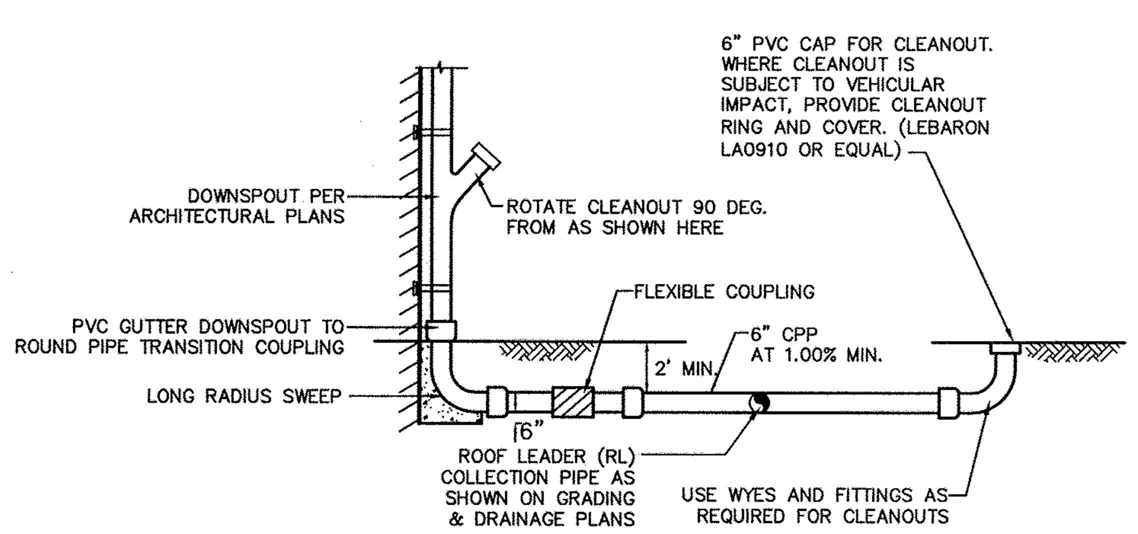

DOWNSPOUT CONNECTION

NOT TO SCALE

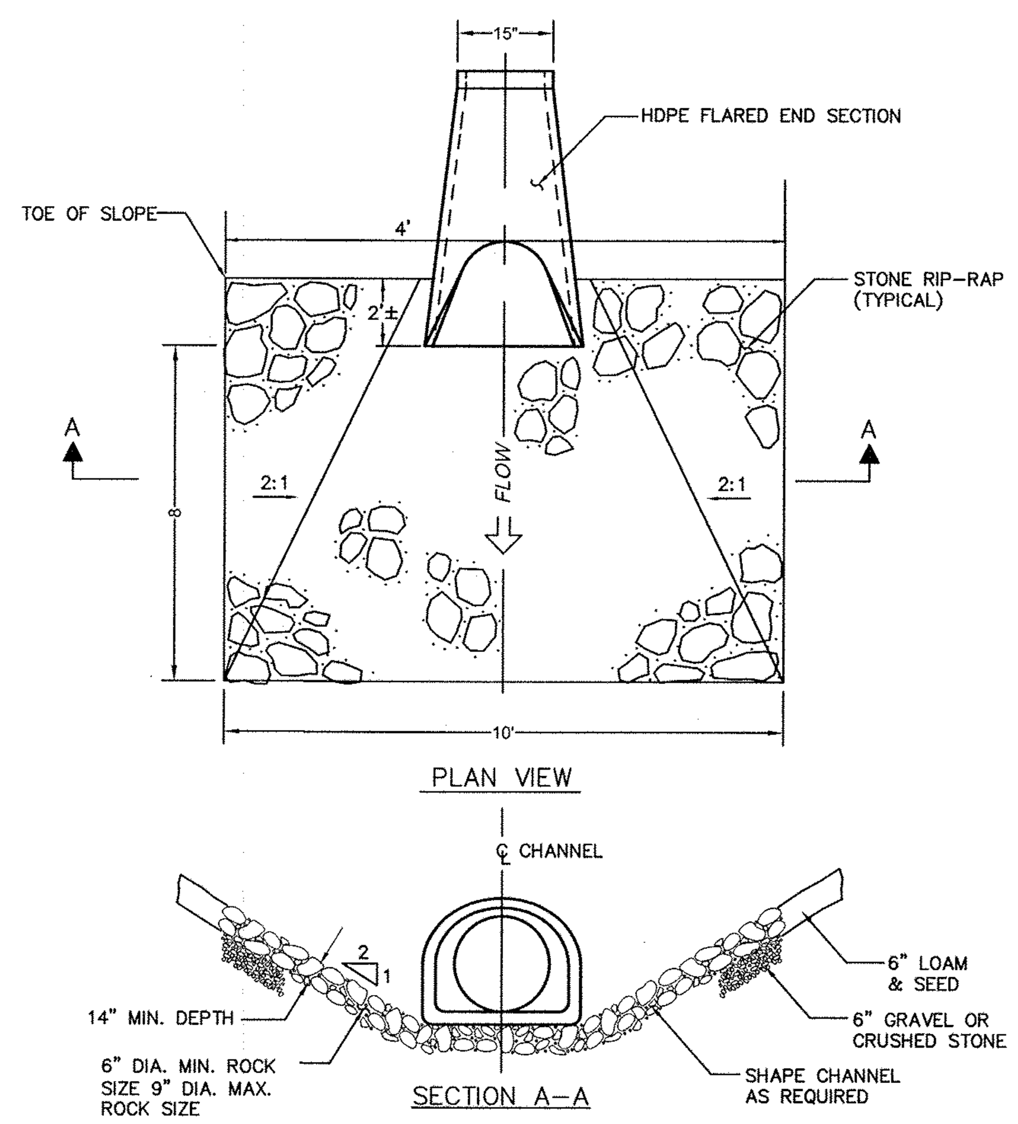

OUTLET EROSION PROTECTION

NOT TO SCALE

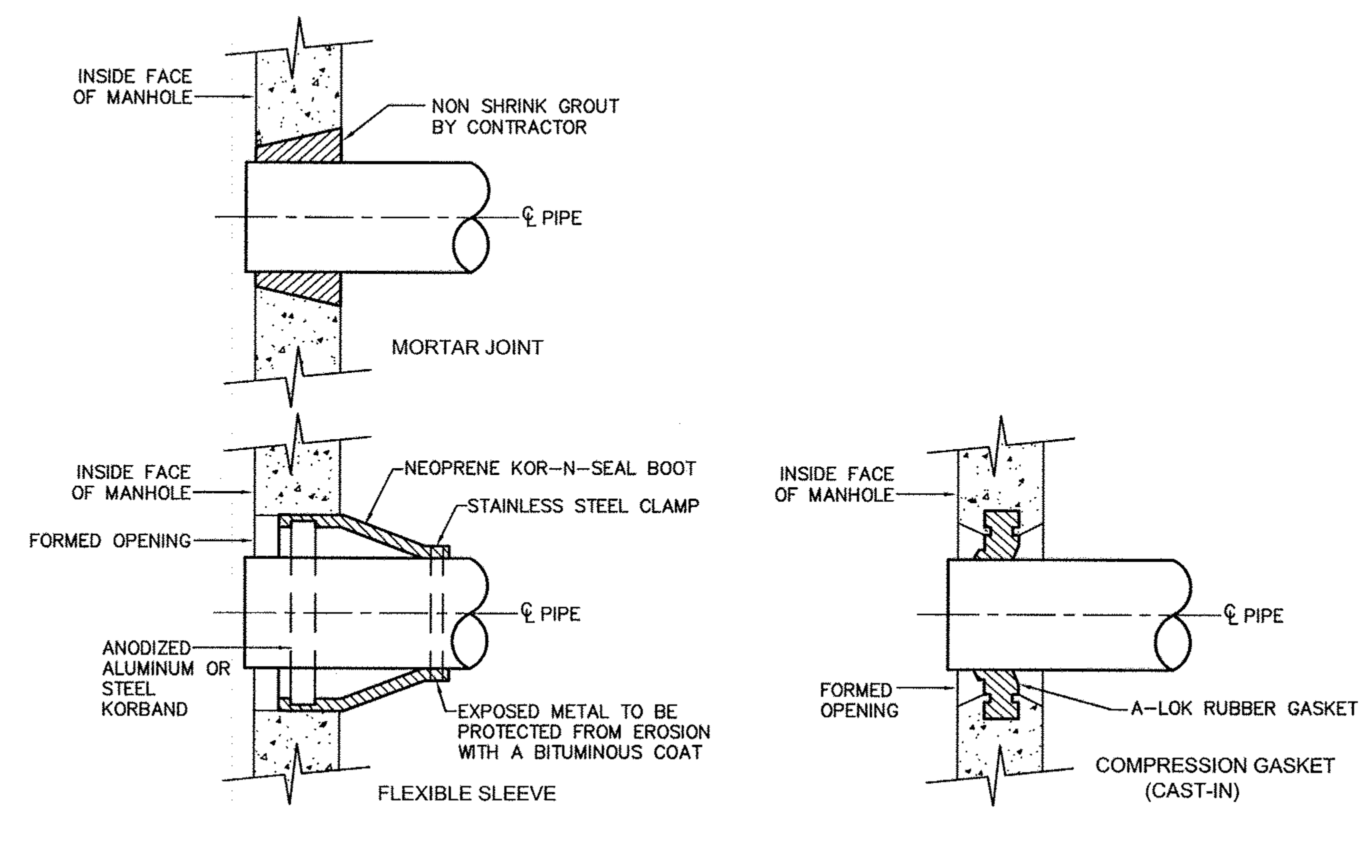

PIPE TO MANHOLE CONNECTIONS

NOT TO SCALE

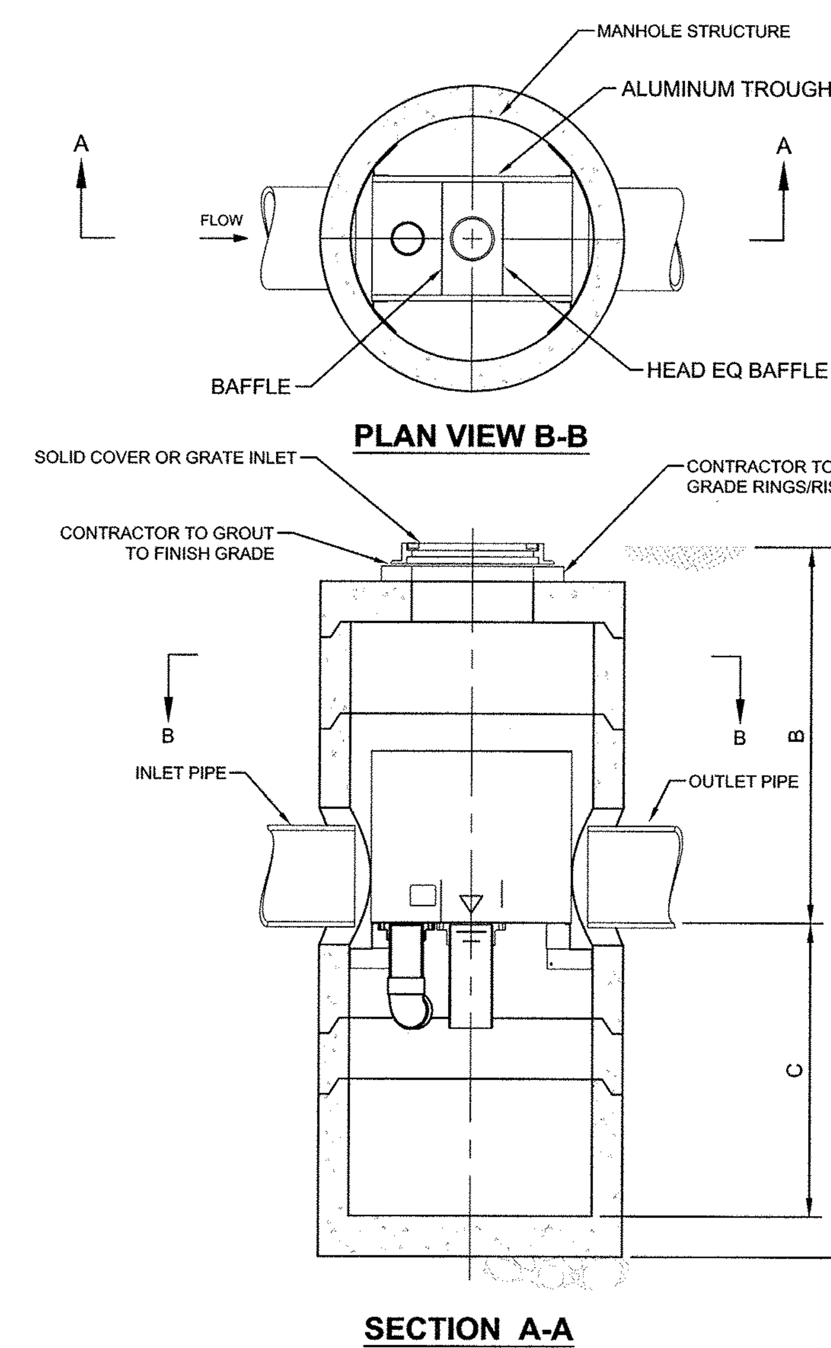

VortSentry

VORTSENTRY HS DESIGN NOTES

VSHS RATED TREATMENT CAPACITY IS SHOWN IN THE TABLE BELOW, OR PER LOCAL REGULATIONS. MAXIMUM HYDRAULIC INTERNAL BYPASS CAPACITY VARIES. CONTACT YOUR CONTECH REPRESENTATIVE FOR ADITIONAL INFORMATION.

THE STANDARD SOLID COVER CONFIGURATION IS SHOWN. ALTERNATE CONFIGURATIONS ARE AVAILABLE AND ARE LISTED BELOW.

	CONFIGURATION OPTION DESCRIPTION
	GRATE INLET (NO INLET PIPE)
	GRATE INLET WITH INLET PIPE

VORTSENTRY HS GENERAL INFORMATION

Model	Manhole Diameter (ID)		Total Treatment Flow Rate		Typical Total Distance Rim to Outside Bottom A		Typical Distance Rim to Invert B		Typical Depth Below Invert (inside) C		Approximate Minimum Distance Rim to Invert		Maximum Pipe Diameter (ID)	
	FT	mm	CFS	L/S	FT	m	FT	m	FT	mm	FT	m	IN	mm
HS36	3	900	0.55	15.6	10.16	3.10	4.08	1.24	5.58	1702	3.00	0.91	18	450
HS48	4	1200	1.20	34.0	13.25	4.04	6.00	1.83	6.75	2057	4.00	1.22	24	600
HS60	5	1500	2.20	62.3	15.13	4.61	6.50	1.98	7.96	2426	4.82	1.47	30	750
HS72	6	1800	3.70	104.8	16.56	5.05	6.75	2.06	9.15	2788	5.59	1.70	36	900
HS84	7	2100	5.60	158.6	18.85	5.75	7.75	2.36	10.35	3156	5.00	1.52	42	1050
HS96	8	2400	8.10	229.4	20.87	6.36	8.50	2.59	11.54	3518	6.91	2.11	48	1200

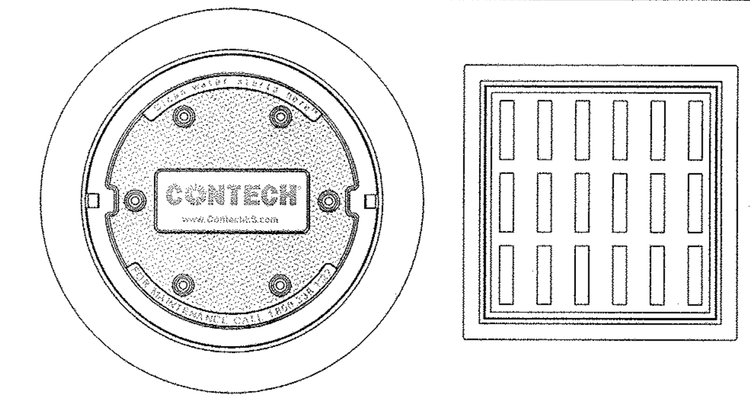

FRAME AND COVER
(DIAMETER VARIES)
N.T.S.

FRAME AND GRATE
(24" SQUARE)
N.T.S.

SITE SPECIFIC DATA REQUIREMENTS

STRUCTURE ID			
WATER QUALITY FLOW RATE (CFS)			*
PEAK FLOW RATE (CFS)			*
RETURN PERIOD OF PEAK FLOW (YRS)			*
PIPE DATA:	I.E.	MATERIAL	DIAMETER
INLET PIPE 1	*	*	*
OUTLET PIPE	*	*	*
RIM ELEVATION			*
ANTI-FLOTATION BALLAST		WIDTH	HEIGHT
		*	*
NOTES/SPECIAL REQUIREMENTS:			

* PER ENGINEER OF RECORD

GENERAL NOTES
1. CONTECH TO PROVIDE ALL MATERIALS UNLESS NOTED OTHERWISE.
2. DIMENSIONS MARKED WITH ( ) ARE REFERENCE DIMENSIONS. ACTUAL DIMENSIONS MAY VARY.
3. FOR FABRICATION DRAWINGS WITH DETAILED STRUCTURE DIMENSIONS AND WEIGHT, PLEASE CONTACT YOUR CONTECH ENGINEERED SOLUTIONS LLC REPRESENTATIVE. www.ContechES.com
4. VORTSENTRY HS WATER QUALITY STRUCTURE SHALL BE IN ACCORDANCE WITH ALL DESIGN DATA AND INFORMATION CONTAINED IN THIS DRAWING.
5. STRUCTURE SHALL MEET AASHTO HS20 AND CASTINGS SHALL MEET AASHTO M306 LOAD RATING, ASSUMING GROUNDWATER ELEVATION AT, OR BELOW, THE OUTLET PIPE INVERT ELEVATION. ENGINEER OF RECORD TO CONFIRM ACTUAL GROUNDWATER ELEVATION.

INSTALLATION NOTES
1. ANY SUB-BASE, BACKFILL DEPTH, AND/OR ANTI-FLOTATION PROVISIONS ARE SITE-SPECIFIC DESIGN CONSIDERATIONS AND SHALL BE SPECIFIED BY ENGINEER OF RECORD.
2. CONTRACTOR TO PROVIDE EQUIPMENT WITH SUFFICIENT LIFTING AND REACH CAPACITY TO LIFT AND SET THE VORTSENTRY HS MANHOLE STRUCTURE (LIFTING CLUTCHES PROVIDED).
3. CONTRACTOR TO INSTALL JOINT SEALANT BETWEEN ALL STRUCTURE SECTIONS AND ASSEMBLE STRUCTURE.
4. CONTRACTOR TO PROVIDE, INSTALL, AND GROUT PIPES. MATCH PIPE INVERTS WITH ELEVATIONS SHOWN.
5. CONTRACTOR TO TAKE APPROPRIATE MEASURES TO ASSURE UNIT IS WATER TIGHT, HOLDING WATER TO FLOWLINE INVERT MINIMUM. IT IS SUGGESTED THAT ALL JOINTS BELOW PIPE INVERTS ARE GROUTED.

CONTECH VORTSENTRY HS WATER QUALITY UNIT (WQU)

NOT TO SCALE

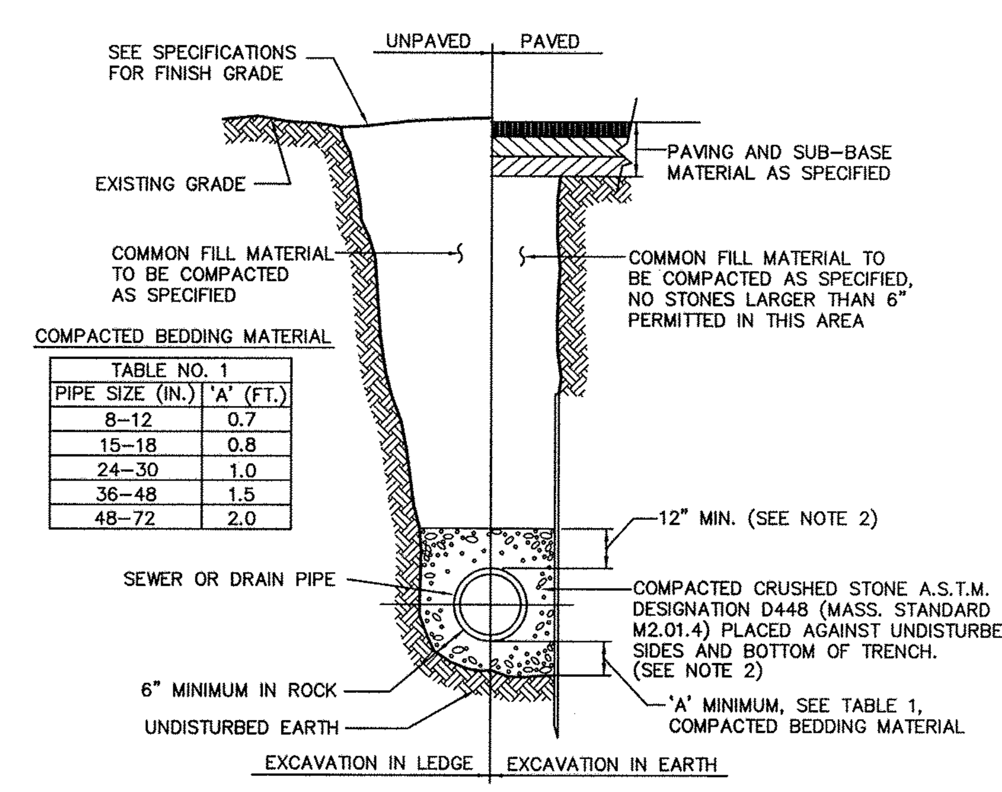

COMPACTED BEDDING MATERIAL

TABLE NO. 1	
PIPE SIZE (IN.)	'A' (FT.)
8–12	0.7
15–18	0.8
24–30	1.0
36–48	1.5
48–72	2.0

NOTES:
1. SHEETING, WHEN REQUIRED, TO BE CUT OFF AT LEAST 5 FEET BELOW STREET AND A MINIMUM OF 1 FOOT ABOVE TOP OF PIPE. WOOD SHEETING DRIVEN BELOW MID-DIAMETER OF THE PIPE SHALL BE LEFT IN PLACE. STEEL SHEETING DRIVEN BELOW MID-DIAMETER MAY BE WITHDRAWN IF APPROVED IN WRITING BY THE ENGINEER. FOR PVC PIPE ALL SHEETING DRIVEN BELOW MID-DIAMETER SHALL BE LEFT IN PLACE.
2. WHEN APPROVED BY THE ENGINEER FOR PIPES OTHER THAN PVC SELECTED GRAVEL FILL MATERIAL MAY BE USED FROM MID-DIAMETER OF PIPE TO 12" ABOVE TOP OF PIPE. NO STONES LARGER THAN 2 INCHES IN ANY DIMENSION WILL BE PERMITTED IN THIS AREA – MASSACHUSETTS STATE MATERIAL STANDARD M1.03.0 TYPE C.
3. TRENCHES LOCATED ON THE ROAD SHOULDER SHALL BE TREATED THE SAME EXCEPT FOR PAVING.
4. PROVIDE AT LEAST ONE IMPERVIOUS DAM IN GRAVEL BEDDING BETWEEN EACH MANHOLE WHERE DIRECTED, OR EVERY 300 FEET, WHICHEVER IS LESS.
5. BEDDING MATERIAL FOR PVC PIPE SHALL MEET THE REQUIREMENTS OF ASTM D2321 CLASS I OR CLASS II EMBEDMENT MATERIALS.

SEWER AND DRAIN TRENCH (PVC OR RCP)

NOT TO SCALE

TETRA TECH
www.tetratech.com
100 Nickerson Road
Marlborough, MA 01752
PHONE: (508) 786-2200 FAX: (508) 786-2201

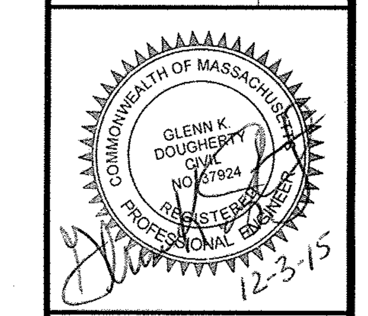

MARK	DATE	DESCRIPTION	BY
1	10-22-15	COMPREHENSIVE PERMIT FILING	
2	10-28-15	REVISED PER TOWN ENGENEER'S COMMENTS	
3	12-3-15	REVISED PER TOWN ENGENEER'S COMMENTS	

Client: Greendale Avenue Venture LLC
Proj. Loc.: Needham, Massachusetts

Comprehensive Permit Plans
692 & 744 Greendale Avenue - Needham, Massachusetts

Detail Sheet

Project No.:	143-82806-15001
Designed By:	G.K.D.
Drawn By:	J.L.P.
Checked By:	G.K.D.

C-6

Copyright: Tetra Tech

Bar Measures 1 inch

12/3/2015 10:27:27 AM - P:\82806\143-82806-15001\CAD\SHEETFILES\136 UNIT DESIGN\DETAIL SHEETS.DWG - PAPPAS, JUD

MC-3500 TECHNICAL SPECIFICATION

NTS

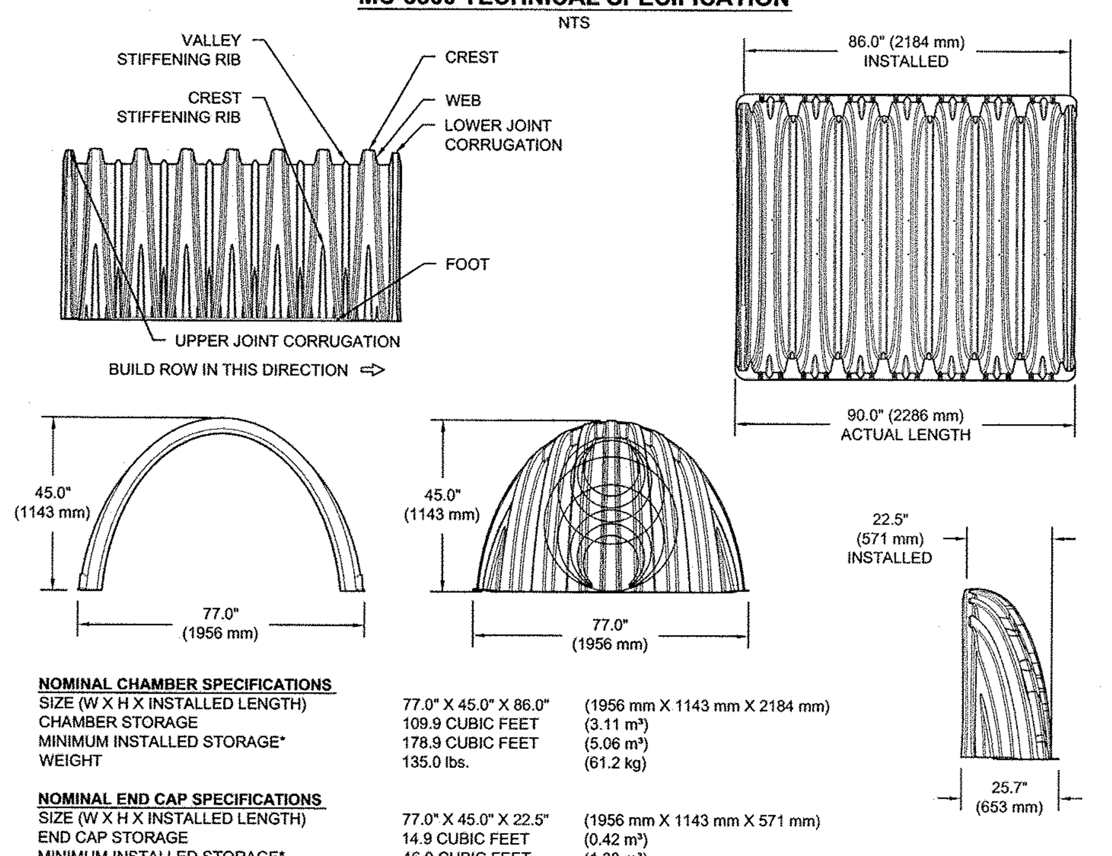

NOMINAL CHAMBER SPECIFICATIONS

SIZE (W X H X INSTALLED LENGTH)	77.0" X 45.0" X 86.0"	(1956 mm X 1143 mm X 2184 mm)
CHAMBER STORAGE	109.9 CUBIC FEET	($3.11 m^3$)
MINIMUM INSTALLED STORAGE*	178.9 CUBIC FEET	($5.06 m^3$)
WEIGHT	135.0 lbs.	(61.2 kg)

NOMINAL END CAP SPECIFICATIONS

SIZE (W X H X INSTALLED LENGTH)	77.0" X 45.0" X 22.5"	(1956 mm X 1143 mm X 571 mm)
END CAP STORAGE	14.9 CUBIC FEET	($0.42 m^3$)
MINIMUM INSTALLED STORAGE*	46.0 CUBIC FEET	($1.30 m^3$)
WEIGHT	50.0 lbs.	(22.7 kg)

*ASSUMES 12" (305 mm) STONE ABOVE, 9" (229 mm) STONE FOUNDATION AND BETWEEN CHAMBERS, 12" (305 mm) STONE PERIMETER IN FRONT OF END CAPS AND 40% STONE POROSITY

STUBS AT BOTTOM OF END CAP FOR PART NUMBERS ENDING WITH "B"
STUBS AT TOP OF END CAP FOR PART NUMBERS ENDING WITH "T"

PART #	STUB	B	C
MC3500IEPP06T	6" (150 mm)	33.21" (844 mm)	---
MC3500IEPP06B		---	0.66" (17 mm)
MC3500IEPP08T	8" (200 mm)	31.16" (791 mm)	---
MC3500IEPP08B		---	0.81" (21 mm)
MC3500IEPP10T	10" (250 mm)	29.04" (738 mm)	---
MC3500IEPP10B		---	0.93" (24 mm)
MC3500IEPP12T	12" (300 mm)	26.36" (670 mm)	---
MC3500IEPP12B		---	1.35" (34 mm)
MC3500IEPP15T	15" (375 mm)	23.39" (594 mm)	---
MC3500IEPP15B		---	1.50" (38 mm)
MC3500IEPP18TC	18" (450 mm)	20.03" (509 mm)	---
MC3500IEPP18BC		---	1.77" (45 mm)
MC3500IEPP24TC	24" (600 mm)	14.48" (368 mm)	---
MC3500IEPP24BC		---	2.06" (52 mm)
MC3500IEPP30BC	30" (750 mm)	---	

NOTE: ALL DIMENSIONS ARE NOMINAL

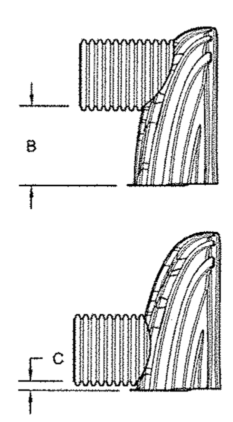

CUSTOM PRECORED INVERTS ARE AVAILABLE UPON REQUEST. INVENTORIED MANIFOLDS INCLUDE 12-24" (300-600 mm) SIZE ON SIZE AND 15-48" (375-1200 mm) ECCENTRIC MANIFOLDS.
CUSTOM INVERT LOCATIONS ON THE MC-3500 END CAP CUT IN THE FIELD ARE NOT RECOMMENDED FOR PIPE SIZES GREATER THAN 10" (250 mm)
THE INVERT LOCATION IN COLUMN 'B' ARE THE HIGHTEST POSSIBLE FOR THE PIPE SIZE.

ACCEPTABLE FILL MATERIALS: STORMTECH MC-3500 CHAMBER SYSTEMS

MATERIAL LOCATION		DESCRIPTION	AASHTO MATERIAL CLASSIFICATIONS	COMPACTION / DENSITY REQUIREMENT
D	**FINAL FILL:** FILL MATERIAL FOR LAYER 'D' STARTS FROM THE TOP OF THE 'C' LAYER TO THE BOTTOM OF FLEXIBLE PAVEMENT OR UNPAVED FINISHED GRADE ABOVE. NOTE THAT PAVEMENT SUBBASE MAY BE PART OF THE 'D' LAYER	ANY SOIL/ROCK MATERIALS, NATIVE SOILS, OR PER ENGINEER'S PLANS. CHECK PLANS FOR PAVEMENT SUBGRADE REQUIREMENTS.	N/A	PREPARE PER SITE DESIGN ENGINEER'S PLANS. PAVED INSTALLATIONS MAY HAVE STRINGENT MATERIAL AND PREPARATION REQUIREMENTS.
C	**INITIAL FILL:** FILL MATERIAL FOR LAYER 'C' STARTS FROM THE TOP OF THE EMBEDMENT STONE ('B' LAYER) TO 24" (600 mm) ABOVE THE TOP OF THE CHAMBER. NOTE THAT PAVEMENT SUBBASE MAY BE A PART OF THE 'C' LAYER.	GRANULAR WELL-GRADED SOIL/AGGREGATE MIXTURES, <35% FINES OR PROCESSED AGGREGATE. MOST PAVEMENT SUBBASE MATERIALS CAN BE USED IN LIEU OF THIS LAYER.	AASHTO M145[1] A-1, A-2-4, A-3 OR AASHTO M43[1] 3, 357, 4, 467, 5, 56, 57, 6, 67, 68, 7, 78, 8, 89, 9, 10	BEGIN COMPACTIONS AFTER 24" (600 mm) OF MATERIAL OVER THE CHAMBERS IS REACHED. COMPACT ADDITIONAL LAYERS IN 12" (300 mm) MAX LIFTS TO A MIN. 95% PROCTOR DENSITY FOR WELL GRADED MATERIAL AND 95% RELATIVE DENSITY FOR PROCESSED AGGREGATE MATERIALS.
B	**EMBEDMENT STONE:** FILL SURROUNDING THE CHAMBERS FROM THE FOUNDATION STONE ('A' LAYER) TO THE 'C' LAYER ABOVE.	CLEAN, CRUSHED, ANGULAR STONE, NOMINAL SIZE DISTRIBUTION BETWEEN 3/4-2 INCH (20-50 mm)	AASHTO M43[1] 3, 4	
A	**FOUNDATION STONE:** FILL BELOW CHAMBERS FROM THE SUBGRADE UP TO THE FOOT (BOTTOM) OF THE CHAMBER.	CLEAN, CRUSHED, ANGULAR STONE, NOMINAL SIZE DISTRIBUTION BETWEEN 3/4-2 INCH (20-50 mm)	AASHTO M43[1] 3, 4	PLATE COMPACT OR ROLL TO ACHIEVE A FLAT SURFACE. [2,3]

PLEASE NOTE:
1. THE LISTED AASHTO DESIGNATIONS ARE FOR GRADATIONS ONLY. THE STONE MUST ALSO BE CLEAN, CRUSHED, ANGULAR. FOR EXAMPLE, A SPECIFICATION FOR #4 STONE WOULD STATE: "CLEAN, CRUSHED, ANGULAR NO. 4 (AASHTO M43) STONE".
2. STORMTECH COMPACTION REQUIREMENTS ARE MET FOR 'A' LOCATION MATERIALS WHEN PLACED AND COMPACTED IN 9" (230 mm) (MAX) LIFTS USING TWO FULL COVERAGES WITH A VIBRATORY COMPACTOR.
3. WHERE INFILTRATION SURFACES MAY BE COMPROMISED BY COMPACTION, FOR STANDARD DESIGN LOAD CONDITIONS, A FLAT SURFACE MAY BE ACHIEVED BY RAKING OR DRAGGING WITHOUT COMPACTION EQUIPMENT. FOR SPECIAL LOAD DESIGNS, CONTACT STORMTECH FOR COMPACTION REQUIREMENTS.

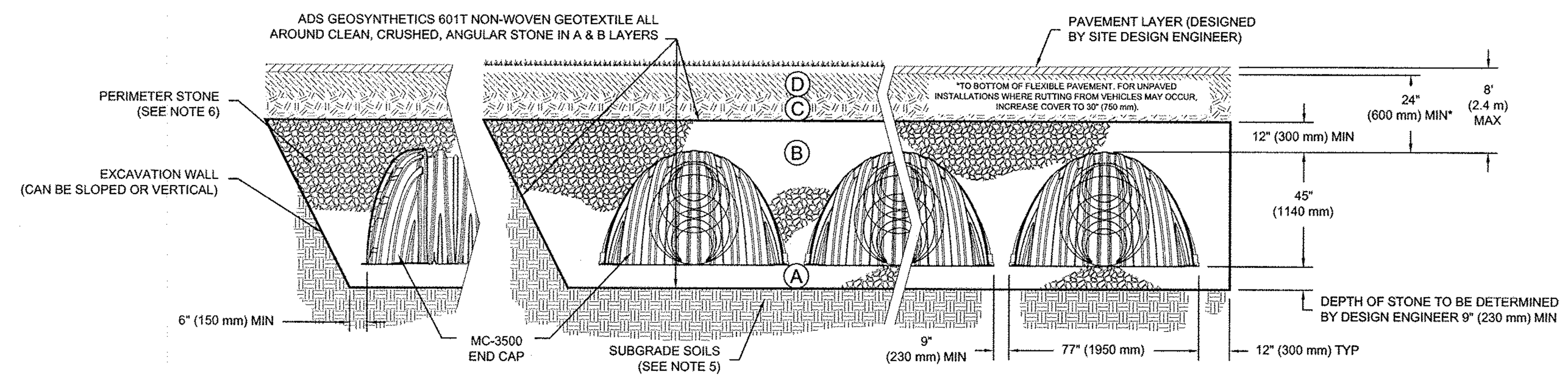

NOTES:

1. MC-3500 CHAMBERS SHALL CONFORM TO THE REQUIREMENTS OF ASTM F2418 "STANDARD SPECIFICATION FOR POLYPROPYLENE (PP) CORRUGATED WALL STORMWATER COLLECTION CHAMBERS".
2. MC-3500 CHAMBERS SHALL BE DESIGNED IN ACCORDANCE WITH ASTM F2787 "STANDARD PRACTICE FOR STRUCTURAL DESIGN OF THERMOPLASTIC CORRUGATED WALL STORMWATER COLLECTION CHAMBERS".
3. "ACCEPTABLE FILL MATERIALS" TABLE ABOVE PROVIDES MATERIAL LOCATIONS, DESCRIPTIONS, GRADATIONS, AND COMPACTION REQUIREMENTS FOR FOUNDATION, EMBEDMENT, AND FILL MATERIALS.
4. THE "SITE DESIGN ENGINEER" REFERS TO THE ENGINEER RESPONSIBLE FOR THE DESIGN AND LAYOUT OF THE STORMTECH CHAMBERS FOR THIS PROJECT.
5. THE SITE DESIGN ENGINEER IS RESPONSIBLE FOR ASSESSING THE BEARING RESISTANCE (ALLOWABLE BEARING CAPACITY) OF THE SUBGRADE SOILS AND THE DEPTH OF FOUNDATION STONE WITH CONSIDERATION FOR THE RANGE OF EXPECTED SOIL MOISTURE CONDITIONS.
   PERIMETER STONE MUST BE EXTENDED HORIZONTALLY TO THE EXCAVATION WALL FOR BOTH VERTICAL AND SLOPED EXCAVATION WALLS.
6. ONCE LAYER 'C' IS PLACED, ANY SOIL/MATERIAL CAN BE PLACED IN LAYER 'D' UP TO THE FINISHED GRADE. MOST PAVEMENT SUBBASE SOILS CAN BE USED TO REPLACE THE MATERIAL REQUIREMENTS OF LAYER 'C' OR 'D' AT THE SITE DESIGN ENGINEER'S DISCRETION.

STORMWATER CHAMBER SPECIFICATIONS

1. CHAMBERS SHALL BE STORMTECH MC-3500 OR APPROVED EQUAL.
2. CHAMBERS SHALL BE MADE FROM VIRGIN, IMPACT-MODIFIED POLYPROPYLENE COPOLYMERS.
3. CHAMBER ROWS SHALL PROVIDE CONTINUOUS, UNOBSTRUCTED INTERNAL SPACE WITH NO INTERNAL SUPPORT PANELS THAT WOULD IMPEDE FLOW OR LIMIT ACCESS FOR INSPECTION.
4. THE STRUCTURAL DESIGN OF THE CHAMBERS, THE STRUCTURAL BACKFILL, AND THE INSTALLATION REQUIREMENTS SHALL ENSURE THAT THE LOAD FACTORS SPECIFIED IN THE AASHTO LRFD BRIDGE DESIGN SPECIFICATIONS, SECTION 12.12, ARE MET FOR: 1) LONG-DURATION DEAD LOADS AND 2) SHORT-DURATION LIVE LOADS, BASED ON THE AASHTO DESIGN TRUCK WITH CONSIDERATION FOR IMPACT AND MULTIPLE VEHICLE PRESENCES.
5. CHAMBERS SHALL MEET THE REQUIREMENTS OF ASTM F2418, "STANDARD SPECIFICATION FOR POLYPROPYLENE (PP) CORRUGATED WALL STORMWATER COLLECTION CHAMBERS".
6. CHAMBERS SHALL BE DESIGNED AND ALLOWABLE LOADS DETERMINED IN ACCORDANCE WITH ASTM F2787, "STANDARD PRACTICE FOR STRUCTURAL DESIGN OF THERMOPLASTIC CORRUGATED WALL STORMWATER COLLECTION CHAMBERS".
7. ONLY CHAMBERS THAT ARE APPROVED BY THE SITE DESIGN ENGINEER WILL BE ALLOWED. THE CHAMBER MANUFACTURER SHALL SUBMIT THE FOLLOWING UPON REQUEST TO THE SITE DESIGN ENGINEER FOR APPROVAL BEFORE DELIVERING CHAMBERS TO THE PROJECT SITE:
   a. A STRUCTURAL EVALUATION SEALED BY A REGISTERED PROFESSIONAL ENGINEER THAT DEMONSTRATES THAT THE SAFETY FACTORS ARE GREATER THAN OR EQUAL TO 1.95 FOR DEAD LOAD AND 1.75 FOR LIVE LOAD, THE MINIMUM REQUIRED BY ASTM F2787 AND BY AASHTO FOR THERMOPLASTIC PIPE.
   b. A STRUCTURAL EVALUATION SEALED BY A REGISTERED PROFESSIONAL ENGINEER THAT DEMONSTRATES THAT THE LOAD FACTORS SPECIFIED IN THE AASHTO LRFD BRIDGE DESIGN SPECIFICATIONS, SECTION 12.12, ARE MET. THE 50 YEAR CREEP MODULUS DATA SPECIFIED IN ASTM F2418 MUST BE USED AS PART OF THE AASHTO STRUCTURAL EVALUATION TO VERIFY LONG-TERM PERFORMANCE.
   c. STRUCTURAL CROSS SECTION DETAIL ON WHICH THE STRUCTURAL EVALUATION IS BASED.
8. CHAMBERS AND END CAPS SHALL BE PRODUCED AT AN ISO 9001 CERTIFIED MANUFACTURING FACILITY.

IMPORTANT - NOTES FOR THE BIDDING AND INSTALLATION OF MC-3500 CHAMBER SYSTEM

1. STORMTECH MC-3500 CHAMBERS SHALL NOT BE INSTALLED UNTIL THE MANUFACTURER'S REPRESENTATIVE HAS COMPLETED A PRE-CONSTRUCTION MEETING WITH THE INSTALLERS.
2. STORMTECH MC-3500 CHAMBERS SHALL BE INSTALLED IN ACCORDANCE WITH THE "STORMTECH MC-3500/MC-4500 CONSTRUCTION GUIDE".
3. CHAMBERS ARE NOT TO BE BACKFILLED WITH A DOZER OR AN EXCAVATOR SITUATED OVER THE CHAMBERS.

   STORMTECH RECOMMENDS 3 BACKFILL METHODS:
   - STONESHOOTER LOCATED OFF THE CHAMBER BED.
   - BACKFILL AS ROWS ARE BUILT USING AN EXCAVATOR ON THE FOUNDATION STONE OR SUBGRADE.
   - BACKFILL FROM OUTSIDE THE EXCAVATION USING A LONG BOOM HOE OR EXCAVATOR.
4. THE FOUNDATION STONE SHALL BE LEVELED AND COMPACTED PRIOR TO PLACING CHAMBERS.
5. JOINTS BETWEEN CHAMBERS SHALL BE PROPERLY SEATED PRIOR TO PLACING STONE.
6. MAINTAIN MINIMUM - 9" (230 mm) SPACING BETWEEN THE CHAMBER ROWS.
7. INLET AND OUTLET MANIFOLDS MUST BE INSERTED A MINIMUM OF 12" (300 mm) INTO CHAMBER END CAPS.
8. EMBEDMENT STONE SURROUNDING CHAMBERS MUST BE A CLEAN, CRUSHED, ANGULAR STONE 3/4-2" (20-50 mm) MEETING THE AASHTO M43 DESIGNATION OF #3 OR #4.
9. STONE MUST BE PLACED ON THE TOP CENTER OF THE CHAMBER TO ANCHOR THE CHAMBERS IN PLACE AND PRESERVE ROW SPACING..
10. ADS RECOMMENDS THE USE OF "FLEXSTORM CATCH IT" INSERTS DURING CONSTRUCTION FOR ALL INLETS TO PROTECT THE SUBSURFACE STORMWATER MANAGEMENT SYSTEM FROM CONSTRUCTION SITE RUNOFF.

NOTES FOR CONSTRUCTION EQUIPMENT

1. STORMTECH MC-3500 CHAMBERS SHALL BE INSTALLED IN ACCORDANCE WITH THE "STORMTECH MC-3500/MC-4500 CONSTRUCTION GUIDE".
2. THE USE OF EQUIPMENT OVER MC-3500 CHAMBERS IS LIMITED:
   - NO EQUIPMENT IS ALLOWED ON BARE CHAMBERS.
   - NO RUBBER TIRED LOADER, DUMP TRUCK, OR EXCAVATORS ARE ALLOWED UNTIL PROPER FILL DEPTHS ARE REACHED IN ACCORDANCE WITH THE "STORMTECH MC-3500/MC-4500 CONSTRUCTION GUIDE".
   - WEIGHT LIMITS FOR CONSRUCTION EQUIPMENT CAN BE FOUND IN THE "STORMTECH MC-3500/MC-4500 CONSTRUCTION GUIDE".
3. FULL 36" (900 mm) OF STABILIZED COVER MATERIALS OVER THE CHAMBERS IS REQUIRED FOR DUMP TRUCK TRAVEL OR DUMPING.

USE OF A DOZER TO PUSH EMBEDMENT STONE BETWEEN THE ROWS OF CHAMBERS MAY CAUSE DAMAGE TO CHAMBERS AND IS NOT AN ACCEPTABLE BACKFILL METHOD. ANY CHAMBERS DAMAGED BY USING THE "DUMP AND PUSH" METHOD ARE NOT COVERED UNDER THE STORMTECH STANDARD WARRANTY.

CONTACT STORMTECH AT 1-888-892-2694 WITH ANY QUESTIONS ON INSTALLATION REQUIREMENTS OR WEIGHT LIMITS FOR CONSTRUCTION EQUIPMENT.

NOTES

- MANIFOLD SIZE TO BE DETERMINED BY SITE DESIGN ENGINEER. SEE TECH SHEET #7 FOR MANIFOLD SIZING GUIDANCE.
- DUE TO THE ADAPTATION OF THIS CHAMBER SYSTEM TO SPECIFIC SITE AND DESIGN CONSTRAINTS, IT MAY BE NECESSARY TO CUT AND COUPLE ADDITIONAL PIPE TO STANDARD MANIFOLD COMPONENTS IN THE FIELD.
- THE SITE DESIGN ENGINEER MUST REVIEW ELEVATIONS AND IF NECESSARY ADJUST GRADING TO ENSURE THE CHAMBER COVER REQUIREMENTS ARE MET.
- THE SITE DESIGN ENGINEER MUST REVIEW THE PROXIMITY OF THE CHAMBERS TO THE BUILDING/STRUCTURE. NO FOUNDATION LOADS SHALL BE TRANSMITTED TO THE CHAMBERS. THE SITE DESIGN ENGINEER MUST CONSIDER EFFECTS OF POSSIBLE SATURATED SOILS ON BEARING CAPACITY OF SOILS AND SEEPAGE INTO BASEMENTS.

MC-SERIES END CAP INSERTION DETAIL

NTS

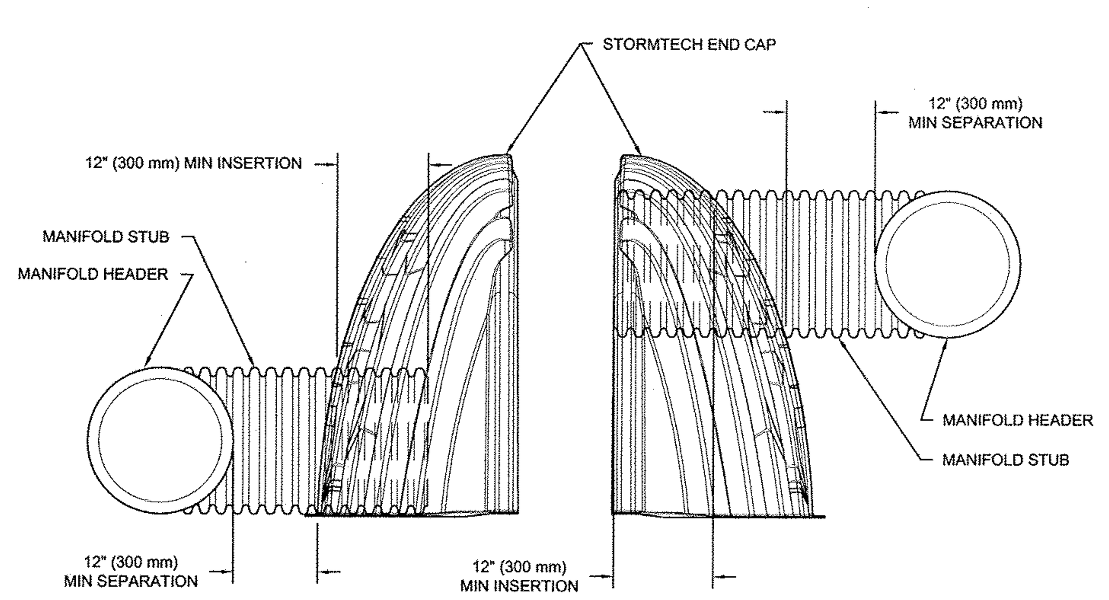

NOTE: MANIFOLD STUB MUST BE LAID HORIZONTAL FOR A PROPER FIT IN END CAP OPENING.

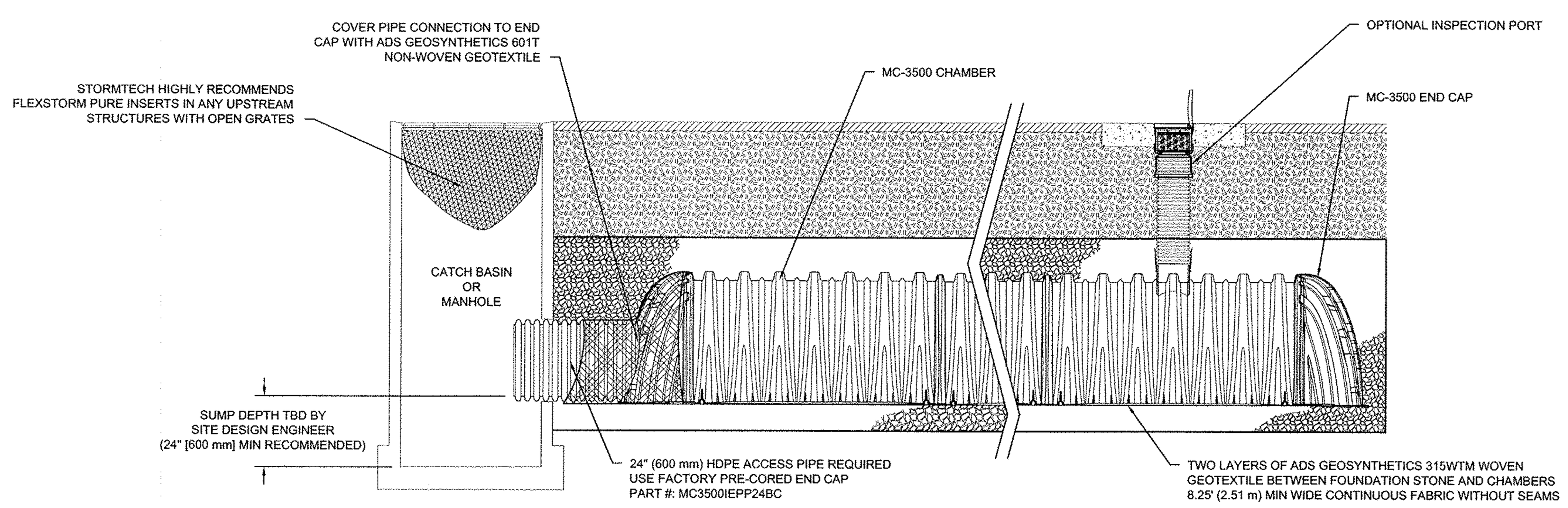

MC-3500 ISOLATOR ROW DETAIL

NTS

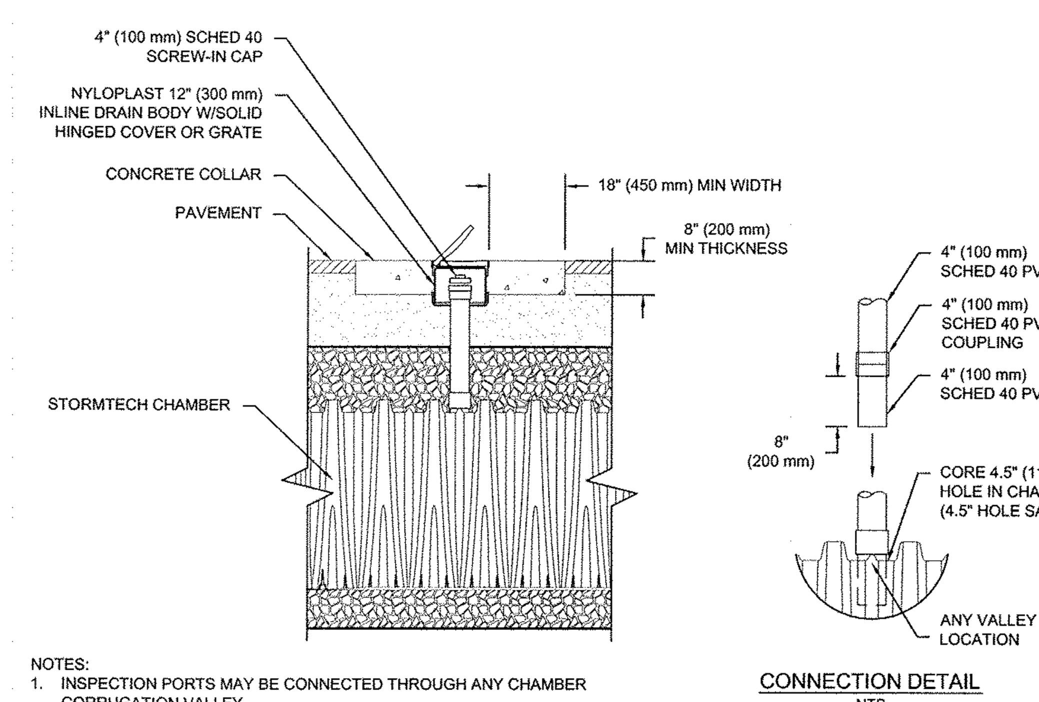

NOTES:
1. INSPECTION PORTS MAY BE CONNECTED THROUGH ANY CHAMBER CORRUGATION VALLEY
2. ALL SCHEDULE 40 FITTINGS TO BE SOLVENT CEMENTED.

INSPECTION & MAINTENANCE

STEP 1) INSPECT ISOLATOR ROW FOR SEDIMENT
- A. INSPECTION PORTS (IF PRESENT)
  - A.1. REMOVE/OPEN LID ON NYLOPLAST INLINE DRAIN
  - A.2. REMOVE AND CLEAN FLEXSTORM FILTER IF INSTALLED
  - A.3. USING A FLASHLIGHT AND STADIA ROD, MEASURE DEPTH OF SEDIMENT AND RECORD ON MAINTENANCE LOG
  - A.4. LOWER A CAMERA INTO ISOLATOR ROW FOR VISUAL INSPECTION OF SEDIMENT LEVELS (OPTIONAL)
  - A.5. IF SEDIMENT IS AT, OR ABOVE, 3" (80 mm) PROCEED TO STEP 2. IF NOT, PROCEED TO STEP 3.
- B. ALL ISOLATOR ROWS
  - B.1. REMOVE COVER FROM STRUCTURE AT UPSTREAM END OF ISOLATOR ROW
  - B.2. USING A FLASHLIGHT, INSPECT DOWN THE ISOLATOR ROW THROUGH OUTLET PIPE
    - i) MIRRORS ON POLES OR CAMERAS MAY BE USED TO AVOID A CONFINED SPACE ENTRY
    - ii) FOLLOW OSHA REGULATIONS FOR CONFINED SPACE ENTRY IF ENTERING MANHOLE
  - B.3. IF SEDIMENT IS AT, OR ABOVE, 3" (80 mm) PROCEED TO STEP 2. IF NOT, PROCEED TO STEP 3.

STEP 2) CLEAN OUT ISOLATOR ROW USING THE JETVAC PROCESS
- A. A FIXED CULVERT CLEANING NOZZLE WITH REAR FACING SPREAD OF 45" (1.1 m) OR MORE IS PREFERRED
- B. APPLY MULTIPLE PASSES OF JETVAC UNTIL BACKFLUSH WATER IS CLEAN
- C. VACUUM STRUCTURE SUMP AS REQUIRED

STEP 3) REPLACE ALL COVERS, GRATES, FILTERS, AND LIDS; RECORD OBSERVATIONS AND ACTIONS.

STEP 4) INSPECT AND CLEAN BASINS AND MANHOLES UPSTREAM OF THE STORMTECH SYSTEM.

NOTES

1. INSPECT EVERY 6 MONTHS DURING THE FIRST YEAR OF OPERATION. ADJUST THE INSPECTION INTERVAL BASED ON PREVIOUS OBSERVATIONS OF SEDIMENT ACCUMULATION AND HIGH WATER ELEVATIONS.
2. CONDUCT JETTING AND VACTORING ANNUALLY OR WHEN INSPECTION SHOWS THAT MAINTENANCE IS NECESSARY.

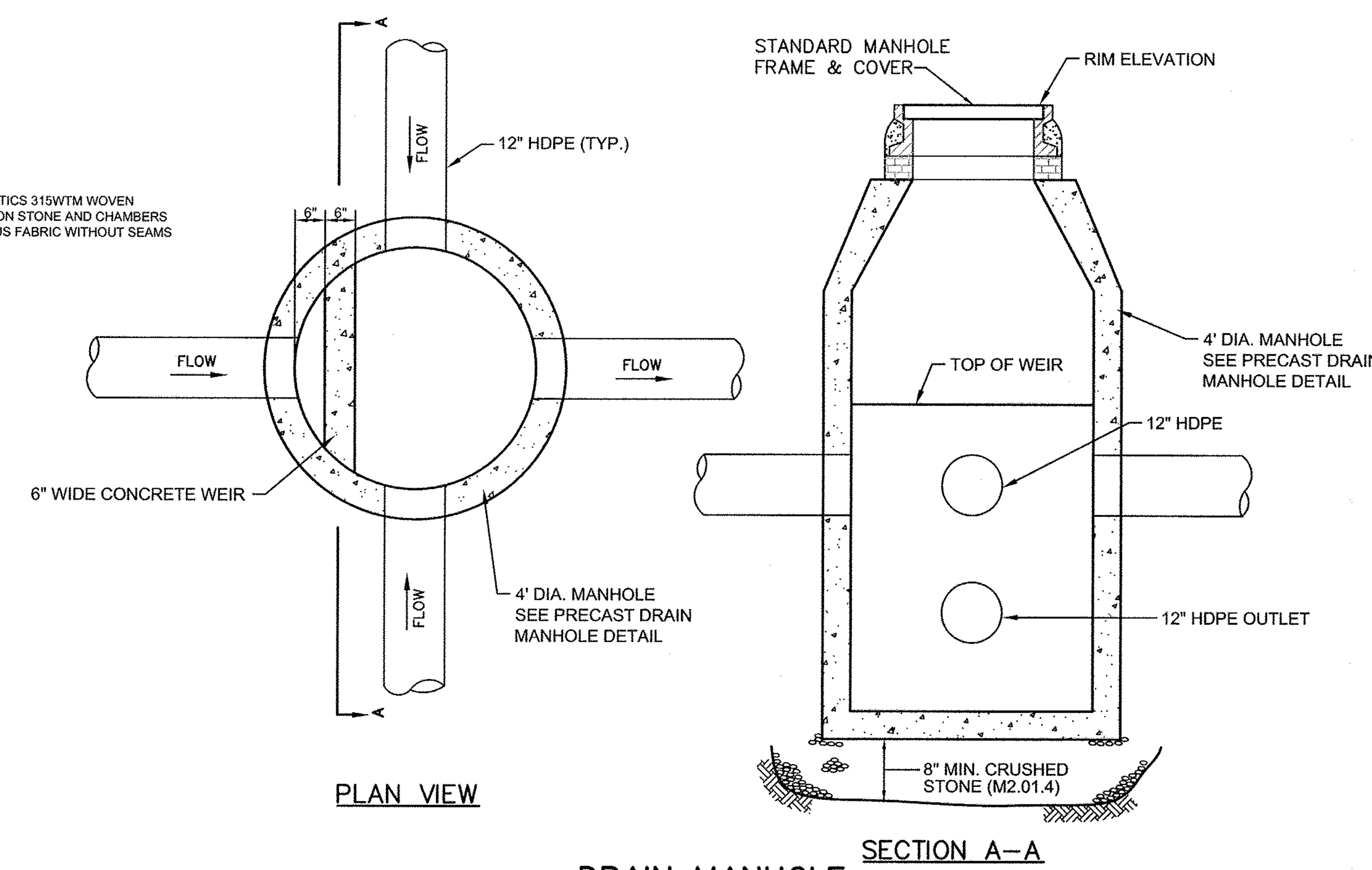

DRAIN MANHOLE
OUTLET CONTROL FOR IFILTRATION BASINS

SEE GRADING AND DRAINAGE PLAN FOR INVERTS
NOT TO SCALE

TETRA TECH
www.tetratech.com
100 Nickerson Road
Marlborough, MA 01752
PHONE: (508) 786-2200 FAX: (508) 786-2201

COMMONWEALTH OF MASSACHUSETTS
GLENN K. DOUGHERTY
CIVIL
NO. 37924
REGISTERED PROFESSIONAL ENGINEER
12-3-15

MARK	DATE	DESCRIPTION	BY
1	10-22-15	COMPREHENSIVE PERMIT FILING	
2	10-28-15	REVISED PER TOWN ENGENEER'S COMMENTS	
3	12-3-15	REVISED PER TOWN ENGENEER'S COMMENTS	

Client: Greendale Avenue Venture LLC
Proj. Loc.: Needham, Massachusetts

Comprehensive Permit Plans
692 & 744 Greendale Avenue - Needham, Massachusetts

Detial Sheet

Project No.:	143-82806-15001
Designed By:	G.K.D.
Drawn By:	J.L.P.
Checked By:	G.K.D.

C-7

Copyright: Tetra Tech

Bar Measures 1 inch

12/3/2015 10:27:14 AM - P:\82806\143-82806-15001\CAD\SHEETFILES\136 UNIT DESIGN\DETAIL SHEETS.DWG - PAPPAS, JUD

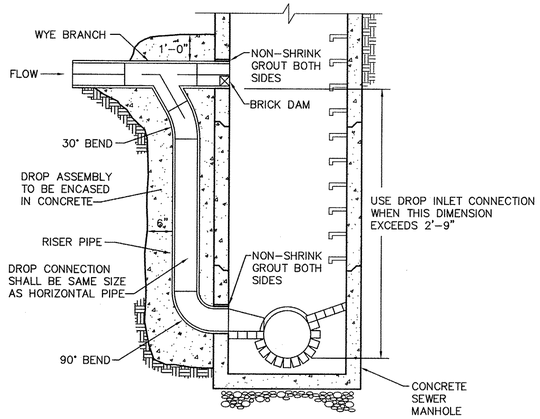

NOTES:

1. MACHINE CORE EXISTING SEWER MANHOLE TO INSTALL NEW ASSEMBLY
2. RESET BRICK INVERT AS NECESSARY

SEWER DROP CONNECTION

NOT TO SCALE

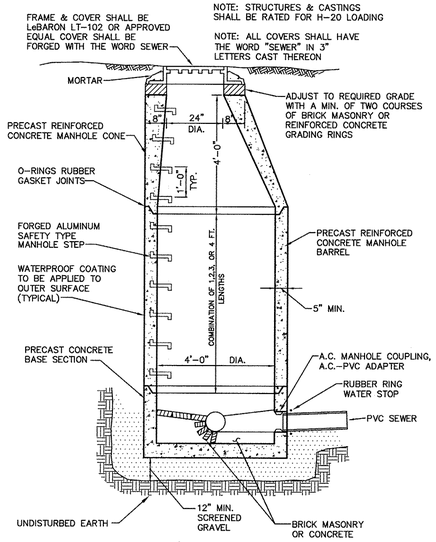

NOTES:
1. CONCRETE = 4000 PSI MINIMUM, CEMENT PER ASTM C-478
2. MANHOLE TO CONFORM TO LATEST ASTM C-478 SPECIFICATIONS FOR "PRECAST REINFORCED CONCRETE MANHOLE SECTIONS"
3. STEEL REINFORCEMENT TO MEET OR EXCEED H20 LOADING.
4. MANHOLE STEPS - POLYPROPYLENE COATED GRADE 60 REINFORCING BAR, PER ASTM C-478 & OSHA (STD 1-1.9)
5. EXTERIOR WATERPROOFING TO BE PROVIDED.

SEWER MANHOLE

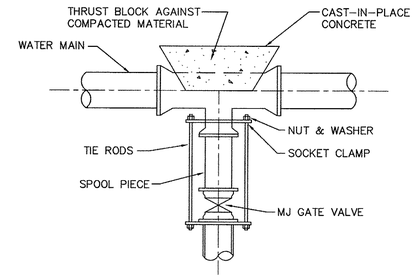

TYPICAL VALVE CONNECTION

RESTRAINED JOINT TEE

NOT TO SCALE

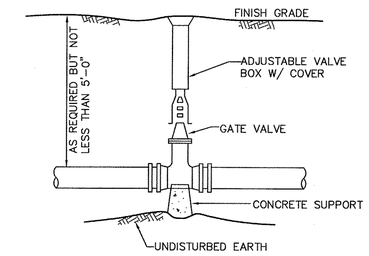

TYPICAL GATE VALVE

NOT TO SCALE

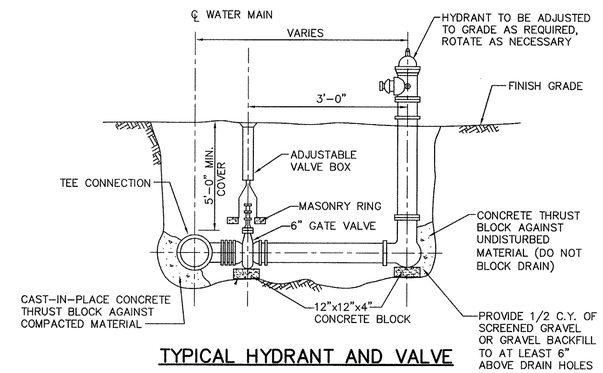

TYPICAL HYDRANT AND VALVE

NOT TO SCALE

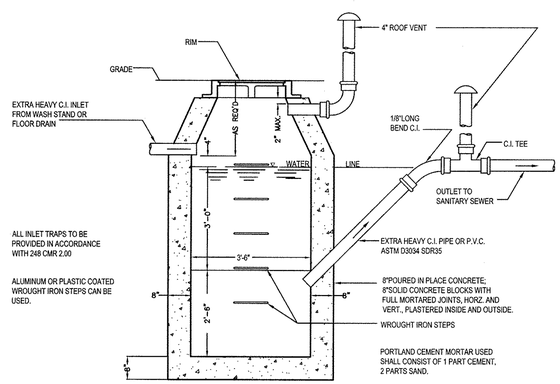

GENERAL CONSTRUCTION NOTES:

1. BASIN TO BE LOCATED OUTSIDE OF BUILDING WHERE POSSIBLE,COVER TO HAVE A CENTER HOLE.
2. A TIGHT COVER MUST BE USED IF BASIN IS LOCATED INSIDE OF BUILDING.
3. OPENING SHALL BE NOT LESS THAN 24" DIA.
4. THE CATCH BASIN SHALL BE SO LOCATED AND CONSTRUCTED THAT SURFACE WATER SHALL BE EXCLUDED.
5. INLET PIPE SHALL BE AT LEAST FOUR INCHES ABOVE NORMAL WATER LINE.
6. WHERE SUBJECT TO FROST OR CRUSHING CONDITIONS, OUTLET SHALL BE AT LEAST THREE FEET BELOW THE SURFACE.
7. THE NEW CATCH BASIN MUST BE FILLED WITH CLEAN WATER BEFORE USING, AND AFTER BEING EMPTIED FOR PERIODIC CLEANING.
8. ALL OIL AND GASOLINE MUST BE REMOVED BEFORE CLEANING OUT THE BASIN, AND MUST NOT BE DISCHARGED INTO THE SEWER THROUGH OTHER FIXTURES.
9. SPECIFICATIONS FOR COVERING SPECIAL CASES OR CONDITIONS, SHALL BE APPROVED BY THE LOCAL AUTHORITIES, AND THE AUTHORITIES OF THE M.W.R.A.
10. WROUGHT IRON STEPS SHALL BE SPACED ABOUT 18" APART.
11. BOTH VENTS SHALL BE EXTENED INDEPENDENTLY 18" ABOVE THE ROOF, OR AS APPROVED BY THE LOCAL AUTHORITIES, AND THE AUTHORITIES OF THE M.W.R.A.

(OUTLET PIPE TO BE 45 DEGREE ANGLE)

NOTES:
1. FOR INLETS LARGER THAN 10" THE DESIGN AND DIMENSIONS WILL BE DETERMINED FOR EACH PARTICULAR CASE
2. PRE-CAST SEPARATORS ARE TO HAVE ALL SPECIFIED HOLES EITHER CORE-BORED OR CAST IN PLACE.

STANDARD OIL AND GREASE SEPARATOR DETAIL

(MWRA STANDARD DETAIL)
NOT TO SCALE

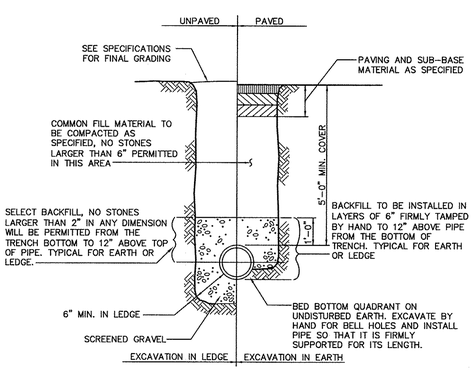

CEMENT LINED DUCTILE IRON (CLDI) PIPE TRENCH

NOT TO SCALE

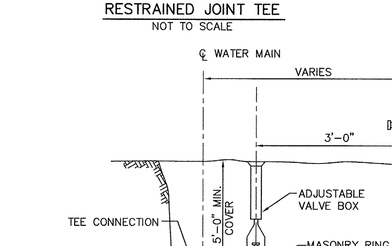

TYPICAL PLUG

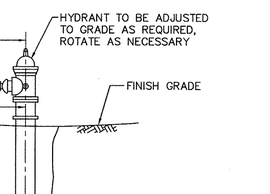

TYPICAL BEND

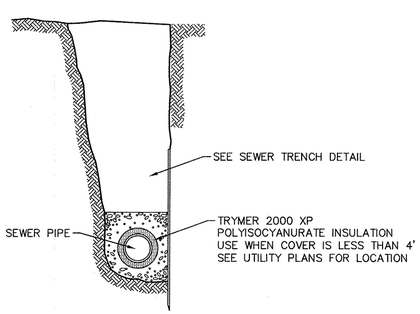

SEWER PIPE INSULATION

NOT TO SCALE

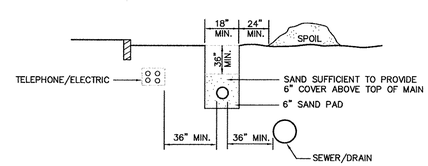

NOTE:
MINIMUM COVER FOR SERVICE LINES IS 24".
CALL DIG SAFE 1-800-322-4844 72 HOURS BEFORE EXCAVATION.

GAS COMPANY TO PROVIDE AND INSTALL GAS MAIN. GENERAL CONTRACTOR SHALL PROVIDE EXCAVATION, SAND BEDDING AND BACKFILL IN ACCORDANCE WITH GAS COMPANY REQUIREMENTS. FINAL LOCATION OF GAS METERS TO BE COORDINATED WITH ARCHITECT AND GAS COMPANY.

GAS MAIN TRENCH

NOT TO SCALE

TABLE OF BEARING AREAS IN SQUARE FEET AGAINST UNDISTURBED MATERIAL FOR WATER MAIN FITTINGS

SIZE OF MAIN (IN.)	45° BEND	TEES & PLUGS	22 1/2° BEND
8" & LESS	4	5	2
10"	6	8	3
12"	9	12	5
16"	12	16	7

CONCRETE THRUST BLOCKS

NOT TO SCALE

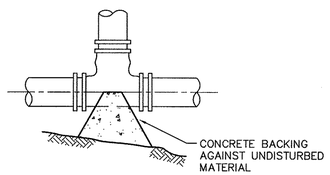

TYPICAL TEE

TETRA TECH
www.tetratech.com
100 Nickerson Road
Marlborough, MA 01752
PHONE: (508) 786-2200 FAX: (508) 786-2201

COMMONWEALTH OF MASSACHUSETTS
GLENN K. DOUGHERTY
NO. 37621
REGISTERED PROFESSIONAL ENGINEER
12-3-15

MARK	DATE	DESCRIPTION	BY
1	10-22-15	COMPREHENSIVE PERMIT FILING	
2	10-28-15	REVISED PER TOWN ENGENEER'S COMMENTS	
3	12-3-15	REVISED PER TOWN ENGENEER'S COMMENTS	

Client: Greendale Avenue Venture LLC
Proj. Loc.: Needham, Massachusetts

Comprehensive Permit Plans
692 & 744 Greendale Avenue - Needham, Massachusetts

Detail Sheet

Project No.:	143-82806-15001
Designed By:	G.K.D.
Drawn By:	J.L.P.
Checked By:	G.K.D.

C-8

Copyright: Tetra Tech

Bar Measures 1 inch

12/3/2015 10:26:59 AM - P:\82806\143-82806-15001\CAD\SHEETFILES\136 UNIT DESIGN\DETAIL SHEETS.DWG - PAPPAS, JUD

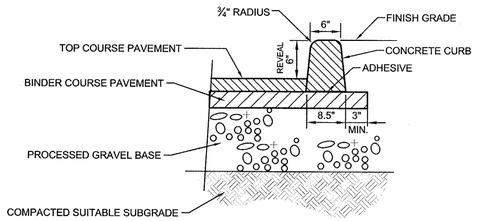

EXTRUDED CONCRETE CURB

NOT TO SCALE

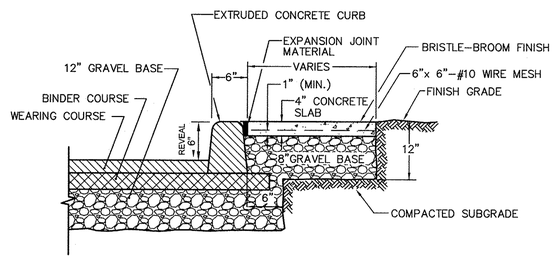

NOTE:
1.) CONCRETE WALK CROSS SLOPE IS PREFERRED AT 1.5% AND SHALL NOT EXCEED 2.0%
2.) CURB AND SIDEWALK ARE TO BE CONSTRUCTED IN ACCORDANCE WITH EACH RESPECTIVE DETAIL.
3.) EXPANSION JOINT FILLER SEALANT TO BE TREMCO VULKEM 245 TWO PART POURABLE POLYURETHANE SEALANT OR APPROVED EQUAL, INSTALLED PER MANUFACTURER'S INSTRUCTIONS.

CURB & CONCRETE SIDEWALK

NOT TO SCALE

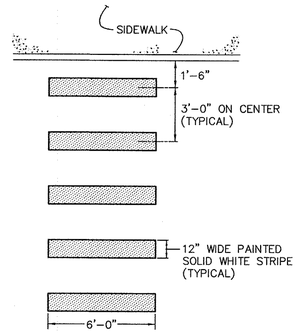

PAINTED CROSSWALK

NOT TO SCALE

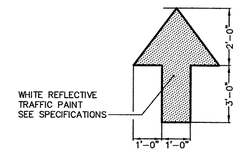

VEHICLE DIRECTIONAL ARROW

NOT TO SCALE

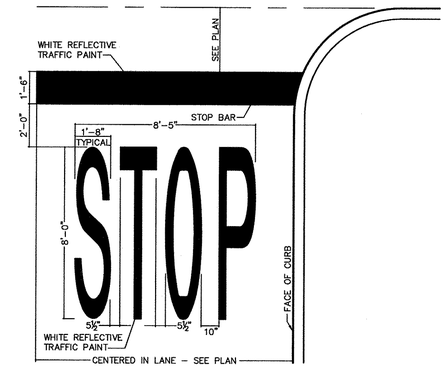

STOP BAR

NOT TO SCALE

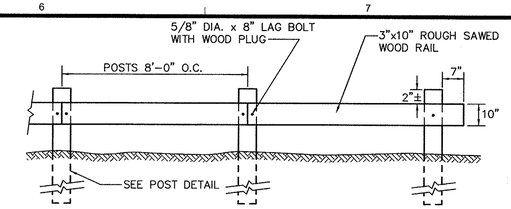

FRONT ELEVATION

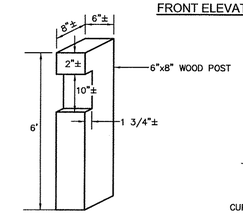

WOOD POST DETAIL

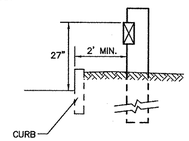

SIDE ELEVATION

NOTES:
1. ALL TIMBER TO BE PRESSURE TREATED.
2. POSTS TO BE SPACED CLOSER THAN 8'–0" ON CENTER AS REQUIRED TO MAINTAIN LOCATION OF GUARD RAIL ALONG EDGE OF DRIVE

WOOD GUARD RAIL

NOT TO SCALE

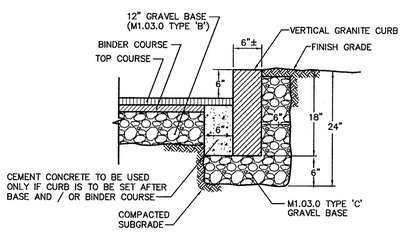

NOTE:
CEMENT CONCRETE BACKING TO BE PROVIDED AT ALL JOINTS AND AT CURB MID SECTION FOR SPANS GREATER THAN 3 FEET. CONCRETE BACKING TO BE PLACED FROM BASE TO WITHIN 9 INCHES OF GRADE AND SPAN 1 FOOT AT JOINTS AND 1.5 FEET AT MID SECTION.

VERTICAL GRANITE CURB

NOT TO SCALE

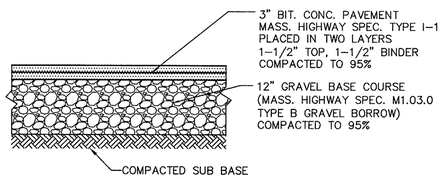

PAVEMENT SECTION

NOT TO SCALE

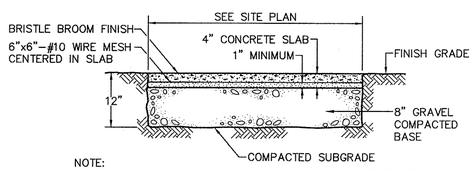

NOTE:
CROSS SLOPE IS PREFERRED AT 1.5% AND SHALL NOT EXCEED 2.0%

CEMENT CONCRETE WALK

NOT TO SCALE

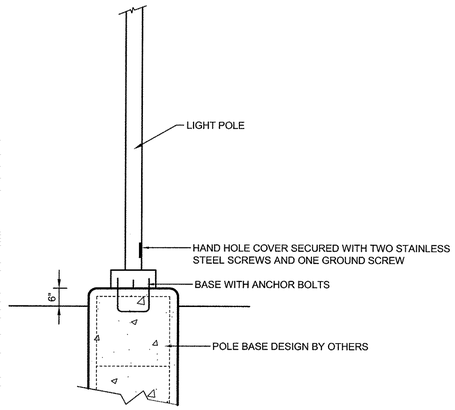

LIGHT POLE DETAIL

NOT TO SCALE

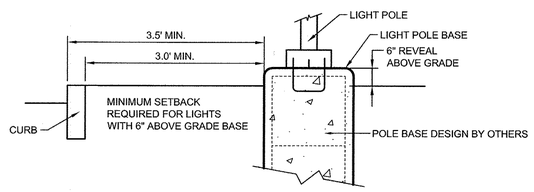

TYPICAL LIGHT POLE BASE HEIGHT ABOVE FINISH GRADE IS 6" UNLESS OTHERWISE SHOWN ON PLAN

LIGHT POLE SETBACK

NOT TO SCALE

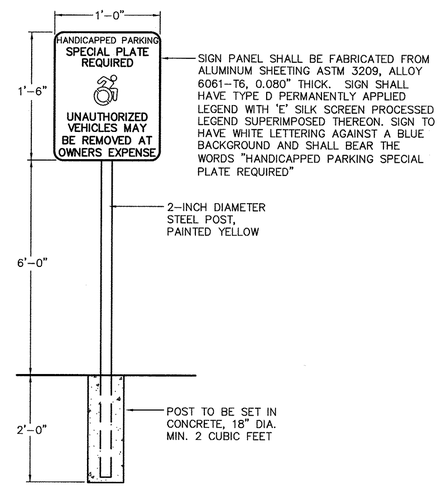

HANDICAP PARKING SIGN

NOT TO SCALE

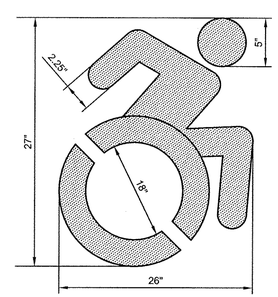

HANDICAP PARKING PAVEMENT MARKING

NOT TO SCALE

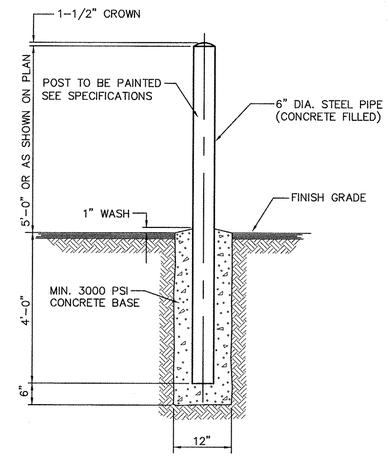

CONCRETE FILLED STEEL BOLLARD

NOT TO SCALE

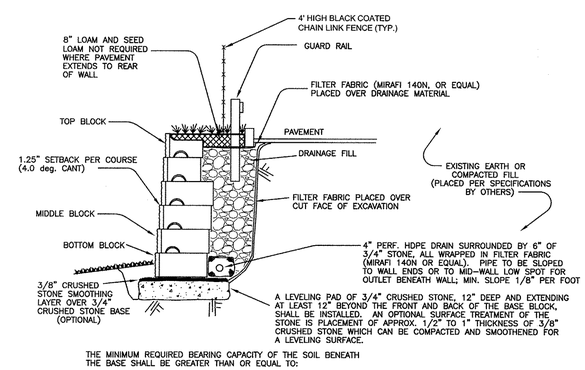

TYPICAL SECTION - REDI ROCK WALL - GRAVITY WALL (TYPICAL DETAIL ONLY - SEE WALL FACE DRAWING FOR SPECIFIC BLOCK CONFIGURATIONS) "REDI-ROCK" SEGMENTAL RETAINING WALL

(NOT TO SCALE)

TETRA TECH
www.tetratech.com
100 Nickerson Road
Marlborough, MA 01752
PHONE: (508) 786-2200 FAX: (508) 786-2201

COMMONWEALTH OF MASSACHUSETTS
GLENN K. DOUGHERTY
CIVIL
NO. 47924
12-3-15

MARK	DATE	DESCRIPTION	BY
1	10-22-15	COMPREHENSIVE PERMIT FILING	
2	10-28-15	REVISED PER TOWN ENGENEER'S COMMENTS	
3	12-3-15	REVISED PER TOWN ENGENEER'S COMMENTS	

Client: Greendale Avenue Venture LLC
Proj. Loc.: Needham, Massachusetts

Comprehensive Permit Plans
692 & 744 Greendale Avenue - Needham, Massachusetts

Detail Sheet

Project No.:	143-82806-15001
Designed By:	G.K.D.
Drawn By:	J.L.P.
Checked By:	G.K.D.

C-9

Copyright: Tetra Tech

Bar Measures 1 inch

12/3/2015 10:27:41 AM - P:\82806\143-82806-15001\CAD\SHEETFILES\136 UNIT DESIGN\DETAIL SHEETS.DWG - PAPPAS, JUD

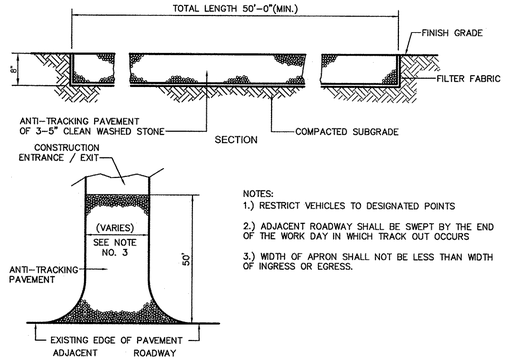

NOTES:
1.) RESTRICT VEHICLES TO DESIGNATED POINTS

2.) ADJACENT ROADWAY SHALL BE SWEPT BY THE END OF THE WORK DAY IN WHICH TRACK OUT OCCURS

3.) WIDTH OF APRON SHALL NOT BE LESS THAN WIDTH OF INGRESS OR EGRESS.

STABILIZED CONSTRUCTION ENTRANCE / EXIT

NOT TO SCALE

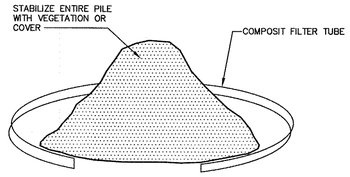

NOTE:

STOCKPILES MUST BE LOCATED OUTSIDE OF BUFFER AREAS AND PHYSICALLY SEPARATED FROM OTHER STORMWATER CONTROLS.

SOIL STOCKPILE CONTROL

NOT TO SCALE

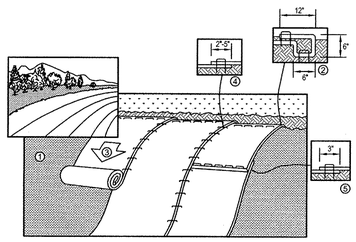

1. PREPARE SOIL BEFORE INSTALLING BLANKETS, INCLUDING ANY NECESSARY APPLICATION OF LIME, FERTILIZER, AND SEED. NOTE: WHEN USING CELL-O-SEED DO NOT SEED PREPARED AREA. CELL-O-SEED MUST BE INSTALLED WITH PAPER SIDE DOWN.

2. BEGIN AT THE TOP OF THE SLOPE BY ANCHORING THE BLANKET IN A 6" WIDE TRENCH WITH APPROXIMATELY 12" OF BLANKET EXTENDED BEYOND THE UP-SLOPE PORTION OF THE TRENCH. ANCHOR THE BLANKET WITH A ROW OF STAPLES/STAKES APPROXIMATELY 12" APART IN THE BOTTOM OF THE TRENCH. BACK FILL AND COMPACT THE TRENCH AFTER STAPLING. APPLY SEED TO PREPARED SOIL AND FOLD REMAINING 12" PORTION OF THE BLANKET BACK OVER SEED AND SOIL. SECURE BLANKET OVER SOIL WITH A ROW OF STAPLES/STAKES SPACED APPROXIMATELY 12" APART ACROSS THE WIDTH OF THE BLANKET.

3. ROLL THE BLANKETS DOWN ACROSS THE SLOPE. BLANKETS WILL UNROLL WITH THE APPROPRIATE SIDE AGAINST THE SOIL SURFACE. ALL BLANKETS MUST BE SECURELY FASTENED TO SOIL SURFACE BY PLACING STAPLES/STAKES IN APPROPRIATE LOCATIONS AS SHOWN IN THE STAPLE PATTERN

4. GUIDE. WHEN USING OPTIONAL DOT SYSTEM, STAPLES/STAKES SHOULD BE PLACED THROUGH EACH OF THE COLORED DOTS CORRESPONDING TO THE APPROPRIATE STAPLE PATTERN.

5. THE EDGES OF PARALLEL BLANKETS MUST BE STAPLED WITH APPROXIMATELY 2"-5" OVERLAP DEPENDING ON BLANKET TYPE. TO ENSURE PROPER SEAM ALIGNMENT, PLACE THE EDGE OF THE OVERLAPPING BLANKET (BLANKET BEING INSTALLED ON TOP) EVEN WITH THE COLORED SEAM STITCH ON THE PREVIOUSLY INSTALLED BLANKET.

6. CONSECUTIVE BLANKETS SPLICED DOWN THE SLOPE MUST BE PLACED END OVER END (SHINGLE STYLE) WITH AN APPROXIMATE 3" OVERLAP. STAPLE THROUGH OVERLAPPED AREA, APPROXIMATELY 12" APART ACROSS ENTIRE BLANKET WIDTH.

7. EROSION CONTROL BLANKETS SHALL BE INSTALLED FOLLOWING MANUFACTURERS SPECIFICATIONS.

NOTE:

IN LOOSE SOIL CONDITIONS THE USE OF STAPLE OR STAKE LENGTHS GREATER THAN 6" MAY BE NECESSARY TO PROPERLY ANCHOR THE BLANKETS

EROSION CONTROL BLANKET DETAIL FOR SLOPE INSTALLATION

NOT TO SCALE

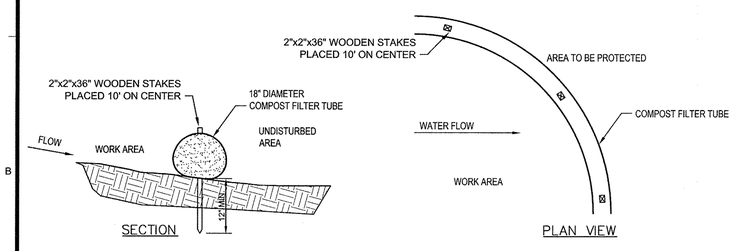

NOTES:

1. PREFABRICATED COMPOST TUBE SHALL BE FILTREXX SOXX OR APPROVED EQUAL.
2. MATERIAL FOR SOCKS SHALL CONSIST OF SANITIZED MATURE COMPOST, FREE OF VIABLE WEED SEEDS AND FOREIGN DEBRIS SUCH AS GLASS AND PLASTIC. COMPOST SHALL BE IN SHREDDED OR GRANULAR FORM AND FREE FROM HARD LUMPS. IN ADDITION, NO KILN-DRIED WOOD OR CONSTRUCTION DEBRIS SHALL BE ALLOWED.
3. TUBES SHALL CONSIST OF JUTE MESH OR OTHER APPROVED BIODEGRADABLE MATERIAL.

COMPOST FILTER TUBE

NOT TO SCALE

Practice: Compost Filter Tube: A compost filter tube is a type of contained compost filter berm consisting of a mesh tube filled with composted material. The compost filter tube, acts as a filter to retain sediment and other pollutants (e.g., suspended solids, nutrients) while allowing the water to flow through it. Tubes are assembled by tying a knot in one end of the mesh sock, filling the tubes with the composted material (usually using a pneumatic blower) then knotting the other end once the desired length is reached.

Installation Requirements: Filter tube shall be used at the limit of work and at the perimeter of soil stockpiles. The ends of the filter tube should be directed upslope, to prevent stormwater from running around the end of the tube. No trenching is required; therefore, soil is not disturbed upon installation.

Maintenance Requirements: Tubes must be inspected for sediment accumulation. If there is excessive ponding behind the filter tube or accumulated sediment reaches the top of the tube, an additional tube should be added on top or in front of the existing filter tube in these areas. An adequate reserve of tubes must be kept on site at all times for emergency and/or routine replacement. Tubes shall be removed only after exposed soils in the contributing drainage area achieve final stabilization.

WATER

1) DUCTILE IRON PIPE SHALL BE CEMENT LINED, COAL TAR ENAMEL, DOUBLE COATED, PUSH-ON TYPE JOINT, AND SHALL CONFORM TO A21.51 (AWWA C151) CLASS 52 FOR SIZES 4 INCH THROUGH 12 INCH.

2) DUCTILE IRON FITTINGS SHALL CONFORM TO ANSI/AWWA C153/A21.53-84 (DUCTILE IRON COMPACT FITTINGS) PRESSURE RATING 350 PSI.

3) GATE VALVES AND TAPPING SLEEVE VALVES SHALL BE RESILIENT SEATED VALVES CONFORMING TO THE REQUIREMENTS OF AWWA STANDARD C509. THE VALVE SHALL OPEN LEFT AND BE PRESSURE RATED FOR 250 PSI WORKING PRESSURE.

4) VALVE BOXES SHALL BE THE 2 PIECE SLIP TYPE, 5 1/4 INCH I.D., FLANGE LOCATED AT THE TOP OF THE BOX, COVER MARKED "WATER" EQUAL TO TYPE CURRENTLY BEING USED BY THE TOWN.

5) WATER PRESSURE REQUIREMENTS AND THE ACTUAL WATER PRESSURE TO BE PROVIDED AT THE BUILDING SHALL BE DETERMINED BY OTHERS.

6) THE CONTRACTOR WILL FURNISH AND INSTALL 1 1/4" CTS DOMESTIC WATER LINES AND WATER METERS AS SPECIFIED BY THE WATER DISTRICT.

7) WATER LINES MUST BE A MINIMUM OF (18) INCHES ABOVE SEWER LINES. IN ADDITION, ONE FULL LENGTH OF WATER MAIN MUST BE CENTERED ON ONE FULL LENGTH OF SEWER LINE SO THAT ALL JOINTS WILL BE AS FAR FROM THE SEWER AS POSSIBLE.

8) WATER SYSTEMS SHALL BE CONSTRUCTED IN ACCORDANCE WITH U.S. DEPARTMENT OF HEALTH, EDUCATION, AND WELFARE, PHS (PUBLIC HEALTH SERVICE) MANUAL OF INDIVIDUAL WATER SYSTEMS, PHS PUBLICATION NO. 24, REVISED 1962, WASHINGTON, GPO (GOVERNMENT PRINTING OFFICE), 1963 AND ANY APPLICABLE CURRENT STATE AND FEDERAL REGULATIONS.

9) CHLORINATION SHALL BE IN ACCORDANCE WITH THE AWWA STANDARD C601 DISINFECTING WATER MAINS.

10) ALL PIPELINES SHALL BE GIVEN COMBINED PRESSURE AND LEAKAGE TESTS AT THE DIRECTION OF THE TOWN WATER DEPARTMENT. HYDROSTATIC AND LEAKAGE TEST SHALL BE MADE IN ACCORDANCE WITH AWWA STANDARD C600 SECTION 4. HYDROSTATIC TESTS SHALL BE MADE AT 1.5 TIMES THE WORKING PRESSURE, BUT NOT LESS THAN 150 PSI FOR A PERIOD OF NOT LESS THAN 2 HOURS IN ACCORDANCE WITH THE ABOVE AWWA STANDARD.

11) INSTALLATION OF WATER UTILITIES TO BE IN CONFORMANCE WITH THE WATER DISTRICT STANDARDS.

12) WHENEVER POSSIBLE WATER MAINS CROSSING SEWERS SHALL BE LAID TO PROVIDE A MINIMUM VERTICAL DISTANCE OF 18" BETWEEN THE OUTSIDE OF THE WATER MAIN AND THE OUTSIDE OF THE SEWER.

13) SHOULD LOCAL CONDITIONS PREVENT AN 18" SEPARATION, BOTH THE WATER MAIN AND THE SEWER SHALL BE ENCASED IN CONCRETE ON EITHER SIDE OF THE CROSSING (SEE DETAIL).

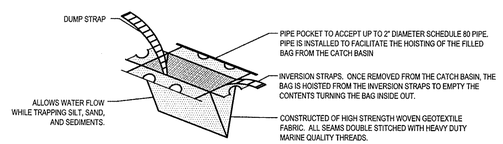

GEOTEXTILE CATCH BASIN INLET PROTECTION

NOT TO SCALE

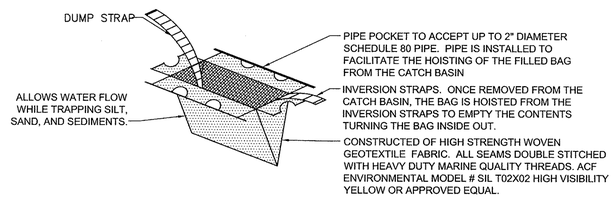

NOTES:

PRACTICE CATCH BASIN INLET PROTECTION:

INLET PROTECTION MEASURES REMOVE SEDIMENT FROM THE DISCHARGE PRIOR TO ENTRY INTO CATCH BASIN INLETS. EXAMPLES OF INLET PROTECTION MEASURES INCLUDE EXCAVATIONS AROUND THE PERIMETER OF THE DROP INLET, FABRIC BARRIERS AROUND INLET ENTRANCE, BLOCK AND GRAVEL PROTECTION, AND STONE-FILLED BAG BERMS. THE VARIOUS TYPES ARE SPECIFIC TO THE GROUND COVER OF THE CONTRIBUTING AREA AS OUTLINED BELOW. INLET PROTECTION PRACTICES TYPICALLY FUNCTION BY SLOWING AND DETAINING SEDIMENT-LADEN RUNOFF AND ALLOWING SEDIMENT TO SETTLE OUT OF SUSPENSION. INLET PROTECTION MUST BE INSTALLED IN NEW CATCH BASINS INLETS IMMEDIATELY UPON INSTALLATION, AND INSTALLED IN EXISTING CATCH BASIN INLETS BEFORE ADJACENT AREAS ARE DISTURBED. SPECIFIC TYPES OF INLET PROTECTION FOR PAVED AND UNPAVED AREAS ARE AS FOLLOWS:

- GEOTEXTILE BARRIERS: POROUS WOVEN FABRIC PLACED INSIDE A CATCH BASIN INLET TO CREATE A SHIELD AGAINST SEDIMENT WHILE ALLOWING WATER TO FLOW INTO THE DRAIN. THIS METHOD INCLUDES SILT SACKS, FILTER FABRIC, A RING OF SILT FENCE, ETC.
- EXCAVATIONS: A SMALL EXCAVATION AROUND THE PERIMETER OF THE CATCH BASIN INLET CREATES A SMALL POOL THAT ALLOWS SEDIMENT TO SETTLE OUT OF SUSPENSION. **THIS MAY BE USED IN NON-PAVED AREAS.**
- GRAVEL/STONE BARRIERS: GRAVEL/STONE CAN BE USED TO SLOWING AND DETAINING SEDIMENT-LADEN RUNOFF AND ALLOW SEDIMENT TO SETTLE OUT OF SUSPENSION. IT IS IMPORTANT TO USE CLEAN, WASHED STONE AND PREVENT IT FROM BEING WASHED INTO THE STORM WATER MANAGEMENT CONVEYANCE SYSTEM.

INSTALLATION REQUIREMENTS: THE CONTRACTOR MUST PROVIDE INLET PROTECTION FOR DISCHARGES TO ANY CATCH BASIN INLET THAT CARRIES STORMWATER FLOW FROM THE SITE DIRECTLY TO A SURFACE WATER OR MS4 (AND IT IS NOT FIRST DIRECTED TO A SEDIMENT BASIN, SEDIMENT TRAP, OR SIMILARLY EFFECTIVE CONTROL). THE CONTRACTOR MUST NOT ALLOW ACCUMULATED SEDIMENT TO BLOCK STORM DRAIN INLETS, THIS MAY CAUSE STORM WATER RUNOFF TO BYPASS THE STORM WATER CONVEYANCE SYSTEM AND CREATE PROBLEMS DOWN-SLOPE INCLUDING ADDITIONAL EROSION OR FLOODING.

MAINTENANCE REQUIREMENTS: CLEAN, OR REMOVE AND REPLACE, THE PROTECTION MEASURES AS SEDIMENT ACCUMULATES, THE FILTER BECOMES CLOGGED, AND/OR PERFORMANCE IS COMPROMISED. WHERE THERE IS EVIDENCE OF SEDIMENT ACCUMULATION ADJACENT TO THE INLET PROTECTION MEASURE, THE DEPOSITED SEDIMENT MUST BE REMOVED BY THE END OF THE SAME WORK DAY IN WHICH IT WAS FOUND OR BY THE END OF THE FOLLOWING WORK DAY IF REMOVAL BY THE SAME WORK DAY IS NOT FEASIBLE.

GEOTEXTILE CATCH BASIN INLET PROTECTION

NOT TO SCALE

GENERAL NOTES:

1) THIS SET OF PLANS HAS BEEN PREPARED FOR PURPOSES OF MUNICIPAL AGENCY REVIEW AND APPROVAL. THIS SET OF PLANS SHALL NOT BE UTILIZED AS CONSTRUCTION DOCUMENTS UNTIL ALL CONDITIONS OF APPROVAL HAVE BEEN SATISFIED ON THE DRAWINGS AND EACH DRAWING HAS BEEN REVISED TO INDICATE "ISSUED FOR CONSTRUCTION."

2) THE SEQUENCE OF ALL EXCAVATION OPERATIONS SHALL BE SUCH AS TO INSURE THE MOST EFFICIENT UTILIZATION OF EXISTING LEDGE EMBANKMENTS AND THE USE OF A MINIMUM AMOUNT OF BORROW. PRIOR TO ANY LEDGE REMOVAL, THE LEDGE AREA SHALL BE PARTIALLY OR COMPLETELY STRIPPED OF OVERBURDEN AS DIRECTED BY THE ENGINEER.

3) ALL SLOPES WHICH ARE 3 FT HORIZONTAL TO 1 FT VERTICAL OR FLATTER MAY BE GRASSED SLOPES. ALL SLOPES STEEPER THAN 3 FT HORIZONTAL TO 1 FT VERTICAL SHALL RECEIVE A SLOPE STABILIZATION GEOTEXTILE FABRIC (2:1) OR A RIP-RAP SLOPE TREATMENT (1:1) UNLESS OTHERWISE NOTED ON THE GRADING PLANS.

4) THE TOWN AND ALL UTILITY COMPANIES MUST BE NOTIFIED BY THE CONTRACTOR AT LEAST 48 HOURS PRIOR TO CONSTRUCTION. LOCATIONS OF EXISTING UTILITIES ARE APPROXIMATE ONLY AND ARE TO BE VERIFIED IN THE FIELD BY THE CONTRACTOR AT THE TIME OF CONSTRUCTION. ALL UNDERGROUND UTILITIES SHOWN WERE COMPILED ACCORDING TO AVAILABLE RECORD PLANS FROM THE VARIOUS UTILITY COMPANIES AND PUBLIC AGENCIES AND AREA APPROXIMATE ONLY. THE OWNER & TETRA TECH ASSUME NO RESPONSIBILITY FOR DAMAGE INCURRED AS A RESULT OF UTILITIES OMITTED OR INACCURATELY SHOWN.

5) WHILE WORKING IN THE VICINITY OF AN EXISTING UTILITY, REFER TO THE FOLLOWING: ALL UNDERGROUND UTILITIES SHOWN WERE COMPILED ACCORDING TO AVAILABLE RECORD PLANS FROM THE VARIOUS UTILITY COMPANIES AND PUBLIC AGENCIES AND ARE APPROXIMATE ONLY. SEE CHAPTER 370, ACTS OF 1963, MASSACHUSETTS GENERAL LAWS. WE ASSUME NO RESPONSIBILITY FOR DAMAGES INCURRED AS A RESULT OF UTILITIES OMITTED OR INACCURATELY SHOWN. BEFORE PLANNING FUTURE CONNECTIONS, THE APPROPRIATE PUBLIC ENGINEERING DEPARTMENT SHALL BE CONTACTED AND THE PROPOSED UTILITY WORK SHALL BE COORDINATED. DIG SAFE NUMBER; 1-888-344-7233.

6) THE CONTRACTOR SHALL GIVE TWENTY-FOUR (24) HOUR NOTICE TO PERTINENT TOWN DEPARTMENTS BEFORE COMMENCING ANY WORK.

7) ALL AREAS DISTURBED BY THE CONTRACTOR SHALL BE RESTORED TO EQUAL OR BETTER CONDITION. (SEE PLANTING AND EROSION CONTROL PLANS). ALL FINISHED SURFACES SHALL BE GRADED SMOOTHLY AND EVENLY.

8) AT THE COMPLETION OF THE CONTRACTOR'S OPERATION, THE CONTRACTOR SHALL BE RESPONSIBLE FOR CLEANING ALL DRAINAGE FACILITIES (NEW AND/OR EXISTING) OF DEBRIS. DRAINAGE SWALES AND STORMWATER BASINS SHALL BE CLEANED FOLLOWING CONSTRUCTION.

9) DO NOT SCALE PLANS. DUE TO REPROGRAPHIC STRETCH, PRINTS MAY NOT SCALE ACCURATELY.

10) LIMITS OF WORK SHALL BE MARKED IN THE FIELD PRIOR TO THE START OF CONSTRUCTION OR SITE CLEARING.

11) THE CONTRACTOR SHALL BE RESPONSIBLE FOR MAINTAINING ADEQUATE RECORDS OF LOCATION AND ELEVATION OF ALL WORK INSTALLED.

12) WATER PRESSURE REQUIREMENTS AND THE ACTUAL WATER PRESSURE TO BE PROVIDED AT THE BUILDING SHALL BE DETERMINED BY OTHERS.

13) IT IS THE CONTRACTORS RESPONSIBILITY TO OBTAIN THE ELECTRONIC FILE FROM TETRA TECH FOR PROPER COORDINATION OF SURVEY LAYOUT.

14) THE CONTRACTOR MUST VERIFY EXISTING UTILITY LOCATIONS AS SHOWN ON THE DRAWINGS. REPORT DISCREPANCIES TO TETRA TECH AT (508) 903-2000.

15) CONTRACTOR MUST PAY ALL FEES AND PERMITS, INCLUDING BUT NOT LIMITED TO ANY BUILDING PERMIT FEES ASSOCIATED WITH RETAINING WALLS AND SITE FENCING.

16) ALL STORM DRAINS ARE 12" CORRUGATED HIGH-DENSITY POLYETHYLENE PIPE WITH SMOOTH INTERIORS UNLESS OTHERWISE NOTED.

17) PROTECT ALL NEW AND EXISTING UTILITIES TO REMAIN DURING CONSTRUCTION.

18) CONTRACTOR IS RESPONSIBLE FOR COORDINATING WITH UTILITY COMPANIES.

19) THE CONTRACTOR MUST CONTACT THE APPROPRIATE UTILITY COMPANIES AND "DIGSAFE" (1-888-DIG-SAFE) AT LEAST 72 HOURS PRIOR TO ANY EXCAVATION WORK TO REQUEST EXACT FIELD LOCATION OF UTILITIES. NOTIFY THE ENGINEER OF ANY UTILITIES INTERFERING WITH THE PROPOSED CONSTRUCTION.

20) THE CONTRACTOR IS RESPONSIBLE FOR ESTABLISHING AND MAINTAINING ALL CONTROL POINTS AND BENCHMARKS NECESSARY FOR THE CONSTRUCTION OF THE PROJECT.

21) THE CONTRACTOR MUST CLEAN ALL NEW & EXISTING DRAINAGE STRUCTURES PRIOR TO PROJECT CLOSEOUT.

DRAINAGE

1) DRAINAGE PIPE SHALL BE HIGH DENSITY POLYETHYLENE (HDPE) BY ADS OR APPROVED EQUAL.

2) PRECAST CONCRETE MANHOLES SHALL CONFORM TO ASTM DESIGNATION C478. CONCRETE REQUIREMENTS SHALL BE 4000 PSI.

3) DRAIN MANHOLE FRAME AND COVER SHALL BE MODEL LC 258-3-000 MARKED WITH THE WORD "DRAIN" AS MANUFACTURED BY E.L. LEBARON COMPANY.

4) AT ALL POINTS OF INTERSECTION BETWEEN STORM DRAIN LINES AND SEWER LINES, ONE FULL LENGTH OF SEWER LINE MUST BE CENTERED OVER THE DRAIN LINE SO THAT BOTH JOINTS WILL BE AS FAR FROM THE DRAIN AS POSSIBLE.

5) INSTALL STEPS IN ACCORDANCE WITH ASTM C-478, 12" O.C. IN ALL CATCHBASINS AND DRAIN MANHOLES DEEPER THAN 4 FEET.

6) MANHOLE AND PIPE JOINT/CONNECTION SHALL BE NEOPRENE KOR-N-SEAL BOOT OR APPROVED EQUAL.

7) ANY AND ALL UTILITY WORK SHALL BE DONE IN ACCORDANCE WITH THE TOWN OF NEEDHAM RULES AND REGULATIONS GOVERNING SAME.

ELECTRIC

1) SPECIFICATIONS: ALL WORK SHALL BE IN ACCORDANCE WITH THE ELECTRIC COMPANY'S STANDARDS. THE NATIONAL ELECTRICAL SAFETY CODE, AND STATE AND LOCAL CODE REQUIREMENTS.

2) APPROVAL: CONTRACTOR SHALL OBTAIN APPROVAL OF PLAN BY THE WIRE INSPECTOR AND THE ELECTRIC COMPANY. PLANS SHALL SHOW THE LOCATION OF CONDUITS AND THEIR TYPE, SIZE, AND NUMBER.

3) PROVIDE ALL EXCAVATION AND BACK FILLING WORK REQUIRED FOR THE INSTALLATION OF ALL ELECTRIC FACILITIES. THIS SHALL INCLUDE EXCAVATING FOR CONDUITS, MANHOLES, AND/OR JUNCTION ENCLOSURES, AND PADS.

4) INSTALL ALL GROUNDING MATERIALS (IE. WIRE, GROUND, RODS, CONNECTORS, ETC.) AS SPECIFIED BY ELECTRIC COMPANY.

TETRA TECH
www.tetratech.com
100 Nickerson Road
Marlborough, MA 01752
PHONE: (508) 786-2200 FAX: (508) 786-2201

COMMONWEALTH OF MASSACHUSETTS
GLENN K. DOUGHERTY
CIVIL
NO. 37624
REGISTERED PROFESSIONAL ENGINEER
12-3-15

MARK	DATE	DESCRIPTION	BY
1	10-22-15	COMPREHENSIVE PERMIT FILING	
2	10-28-15	REVISED PER TOWN ENGENEER'S COMMENTS	
3	12-3-15	REVISED PER TOWN ENGENEER'S COMMENTS	

Client: Greendale Avenue Venture LLC
Proj. Loc.: Needham, Massachusetts

Comprehensive Permit Plans
692 & 744 Greendale Avenue - Needham, Massachusetts

Detail Sheet

Project No.:	143-82806-15001
Designed By:	G.K.D.
Drawn By:	J.L.P.
Checked By:	G.K.D.

C-10

Copyright: Tetra Tech

Bar Measures 1 inch

12/3/2015 10:27:56 AM - P:\82806\143-82806-15001\CAD\SHEETFILES\136 UNIT DESIGN\DETAIL SHEETS.DWG - PAPPAS, JUD