LAYOUT LEGEND

- COLORED CONCRETE WITH STAMPED PATTERN
- CONCRETE
- SAFETY SURFACING
- OUTDOOR BENCH
- NATURAL GAS GRILL WITH AUTO SHUT OFF TIMER
- WALL LIGHT
- BOLLARD LIGHTING, 30" HEIGHT
- WALKWAY LIGHTING, 12'-0" HEIGHT
- PARKING LOT LIGHTING, 18'-0" HEIGHT

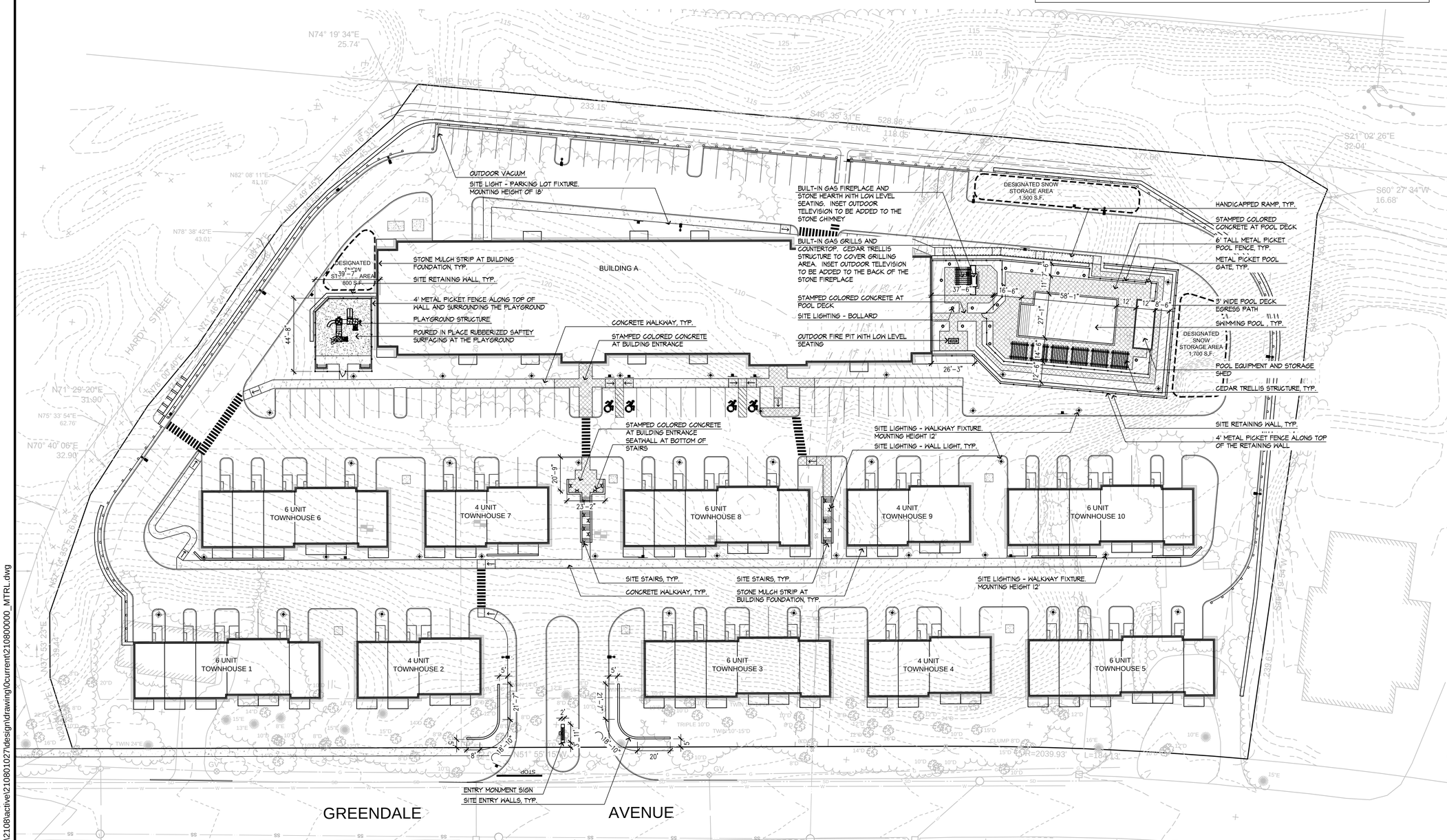
OUTDOOR VACUUM
SITE LIGHT - PARKING LOT FIXTURE. MOUNTING HEIGHT OF 18'
BUILT-IN GAS FIREPLACE AND STONE HEARTH WITH LOW LEVEL SEATING. INSET OUTDOOR TELEVISION TO BE ADDED TO THE STONE CHIMNEY
DESIGNATED SNOW STORAGE AREA 1,500 S.F.
HANDICAPPED RAMP, TYP.
STAMPED COLORED CONCRETE AT POOL DECK
6' TALL METAL PICKET POOL FENCE, TYP.
METAL PICKET POOL GATE, TYP.
BUILT-IN GAS GRILLS AND COUNTERTOP. CEDAR TRELLIS STRUCTURE TO COVER GRILLING AREA. INSET OUTDOOR TELEVISION TO BE ADDED TO THE BACK OF THE STONE FIREPLACE
STONE MULCH STRIP AT BUILDING FOUNDATION, TYP.
SITE RETAINING WALL, TYP.
DESIGNATED SNOW STORAGE AREA 800 S.F.
BUILDING A
4' METAL PICKET FENCE ALONG TOP OF WALL AND SURROUNDING THE PLAYGROUND
PLAYGROUND STRUCTURE
POURED IN PLACE RUBBERIZED SAFTEY SURFACING AT THE PLAYGROUND
STAMPED COLORED CONCRETE AT POOL DECK
SITE LIGHTING - BOLLARD
OUTDOOR FIRE PIT WITH LOW LEVEL SEATING
3' WIDE POOL DECK EGRESS PATH
SWIMMING POOL , TYP.
DESIGNATED SNOW STORAGE AREA 1,700 S.F.
POOL EQUIPMENT AND STORAGE SHED
CEDAR TRELLIS STRUCTURE, TYP.
CONCRETE WALKWAY, TYP.
STAMPED COLORED CONCRETE AT BUILDING ENTRANCE
STAMPED COLORED CONCRETE AT BUILDING ENTRANCE SEATWALL AT BOTTOM OF STAIRS
SITE LIGHTING - WALKWAY FIXTURE. MOUNTING HEIGHT 12'
SITE LIGHTING - WALL LIGHT, TYP.
SITE RETAINING WALL, TYP.
4' METAL PICKET FENCE ALONG TOP OF THE RETAINING WALL
6 UNIT TOWNHOUSE 6
4 UNIT TOWNHOUSE 7
6 UNIT TOWNHOUSE 8
4 UNIT TOWNHOUSE 9
6 UNIT TOWNHOUSE 10
SITE STAIRS, TYP.
CONCRETE WALKWAY, TYP.
SITE STAIRS, TYP.
STONE MULCH STRIP AT BUILDING FOUNDATION, TYP.
SITE LIGHTING - WALKWAY FIXTURE. MOUNTING HEIGHT 12'
6 UNIT TOWNHOUSE 1
4 UNIT TOWNHOUSE 2
6 UNIT TOWNHOUSE 3
4 UNIT TOWNHOUSE 4
6 UNIT TOWNHOUSE 5
ENTRY MONUMENT SIGN
SITE ENTRY WALLS, TYP.
GREENDALE
AVENUE
HARDY STREET
WIRE FENCE
N74° 19' 34"E 25.74'
S46° 35' 31"E 528.86'
S21° 02' 26"E 32.04'
S60° 27' 34"W 16.68'
N82° 08' 11"E 41.16'
N78° 38' 42"E 43.01'
N71° 29' 20"E 31.90'
N75° 33' 54"E 62.76'
N70° 40' 06"E 32.90'
N37° 53' 23"E 39.44'
S51° 55' 16"W 76.04'
S37° 19' 54"W 29.01'
N51° 55' 16"E 76.04'
N37° 53' 23"E 39.44'
N82° 49' 45"E 76.04'
N71° 29' 20"E 31.90'
N70° 40' 06"E 32.90'
N75° 33' 54"E 62.76'
N78° 00' 40"E 43.01'
N74° 19' 34"E 25.74'
N96° 16' 33"E 41.16'
N82° 49' 45"E 76.04'
N78° 38' 42"E 43.01'
N71° 29' 20"E 31.90'
N75° 33' 54"E 62.76'
N70° 40' 06"E 32.90'
N37° 53' 23"E 39.44'
N51° 55' 16"E 76.04

Outdoor Luminaire Schedule								
Symbol	Qty	Label	Description	Arm	Lum. Lumens	LLF	Filename
	14	B	8563LED	0	1361	0.900	8563LED.ies
	1	D3s	DSDP1-III-48VLED-NW-350mA-HS	1.5	3479	0.900	DSDP1-3S-48VLED-NW-350.ies
	37	DS4s	DSDP1-IV-64VLED-NW-350mA-HS	1.5	4804	0.900	DSDP1-4S-64VLED-NW-350.ies
	8	R3s	RZR-III-80LED-NW-525-HS	1.5	8662	0.900	RZR-3S-80PLED-NW-525.ies
	4	R3	RZR-PLED-III-80LED-525mA-NW	1.5	14128	0.900	RZR-3-80PLED-NW-525.IES

Calculation Summary							
Label	CalcType	Units	Avg	Max	Min	Avg/Min	Max/Min
SITE	Illuminance	Fc	0.88	13.8	0.0	N.A.	N.A.

Luminaire Location Summary						
LumNo	Label	X	Y	Z	Orient	Tilt
1	R3s	735354.25	2929083.5	17	268.025	7.5
2	R3s	735245.75	2929064	17	287.155	7.5
3	R3s	735141.25	2929032.75	17	298.435	7.5
4	R3	735450.25	2929016.25	18	226.826	0
5	DS4s	735213.5	2929003	12	233.949	0
6	DS4s	735267.25	2928989.25	12	54.462	0
7	DS4s	735311.25	2928954.75	12	229.787	0
8	DS4s	735141	2928948	12	231.667	0
9	DS4s	735234.25	2928948	12	54.462	0
10	DS4s	735083.5	2928947.5	12	54.462	0
11	R3s	735486.75	2928936.25	18	47.437	0
12	DS4s	735353.75	2928922.25	12	228.894	0
13	DS4s	735187.25	2928913.25	12	231.667	0
14	DS4s	735282.25	2928911.25	12	54.462	0
15	R3	735566.25	2928903.5	18	226.826	0
16	DS4s	735144.5	2928901.25	12	54.462	0
17	DS4s	735395.5	2928888.75	12	228.894	0
18	DS4s	735232.25	2928877.25	12	231.667	0
19	DS4s	735192.25	2928863.75	12	54.462	0
20	DS4s	735344.5	2928862.5	12	54.462	0
21	DS4s	735447.5	2928849.5	12	228.894	0
22	DS4s	735271.5	2928846.25	12	231.667	0
23	R3	735634	2928843.5	18	226.826	0
24	DS4s	735391.75	2928825.5	12	54.462	0
25	B	735595.25	2928818.25	3.5	0	0
26	B	735585.25	2928813.25	3.5	0	0
27	DS4s	735314.75	2928813	12	231.667	0
28	DS4s	735503.5	2928805.5	12	228.894	0
29	R3s	735235.25	2928799	18	320.612	0
30	B	735580.25	2928796	3.5	0	0
31	B	735619.75	2928795	3.5	0	0
32	B	735569	2928791.25	3.5	0	0
33	DS4s	735436.25	2928789.25	12	54.462	0
34	B	735589.5	2928788.5	3.5	0	0
35	B	735612.75	2928787	3.5	0	0
36	B	735578.75	2928783.75	3.5	0	0
37	B	735632.25	2928783.75	3.5	0	0
38	B	735603.25	2928780.25	3.5	0	0
39	B	735591.25	2928773.25	3.5	0	0
40	B	735643.75	2928773	3.5	0	0
41	R3	735709.5	2928768.5	18	226.826	0
42	B	735655	2928761.75	3.5	0	0
43	B	735581.25	2928760.5	3.5	0	0
44	DS4s	735382	2928760.25	12	231.667	0
45	DS4s	735565.5	2928758	12	0	0
46	R3s	735287	2928757.5	18	142.452	0
47	DS4s	735330	2928756	12	54.462	0
48	DS4s	735484	2928752.75	12	54.462	0
49	DS4s	735539	2928747.5	12	230.11	0
50	DS4s	735692.5	2928727	12	180	0
51	D3s	735431.5	2928720.5	12	231.196	0
52	DS4s	735607	2928718.5	12	51.028	0
53	DS4s	735390	2928709.25	12	54.462	0
54	DS4s	735593	2928707.5	12	228.894	0
55	DS4s	735545.75	2928703.5	12	54.462	0
56	DS4s	735648.25	2928679.75	12	90	0
57	DS4s	735630.25	2928677.25	12	228.894	0
58	DS4s	735436.5	2928672	12	54.462	0
59	DS4s	735498.75	2928668.5	12	232.261	0
60	R3s	735717.5	2928652	18	141.52	0
61	DS4s	735560.5	2928620	12	232.261	0
62	DS4s	735513.5	2928611.25	12	54.462	0
63	R3s	735656.75	2928588.5	18	136.189	0
64	DS4s	735573.75	2928564.75	12	54.462	0

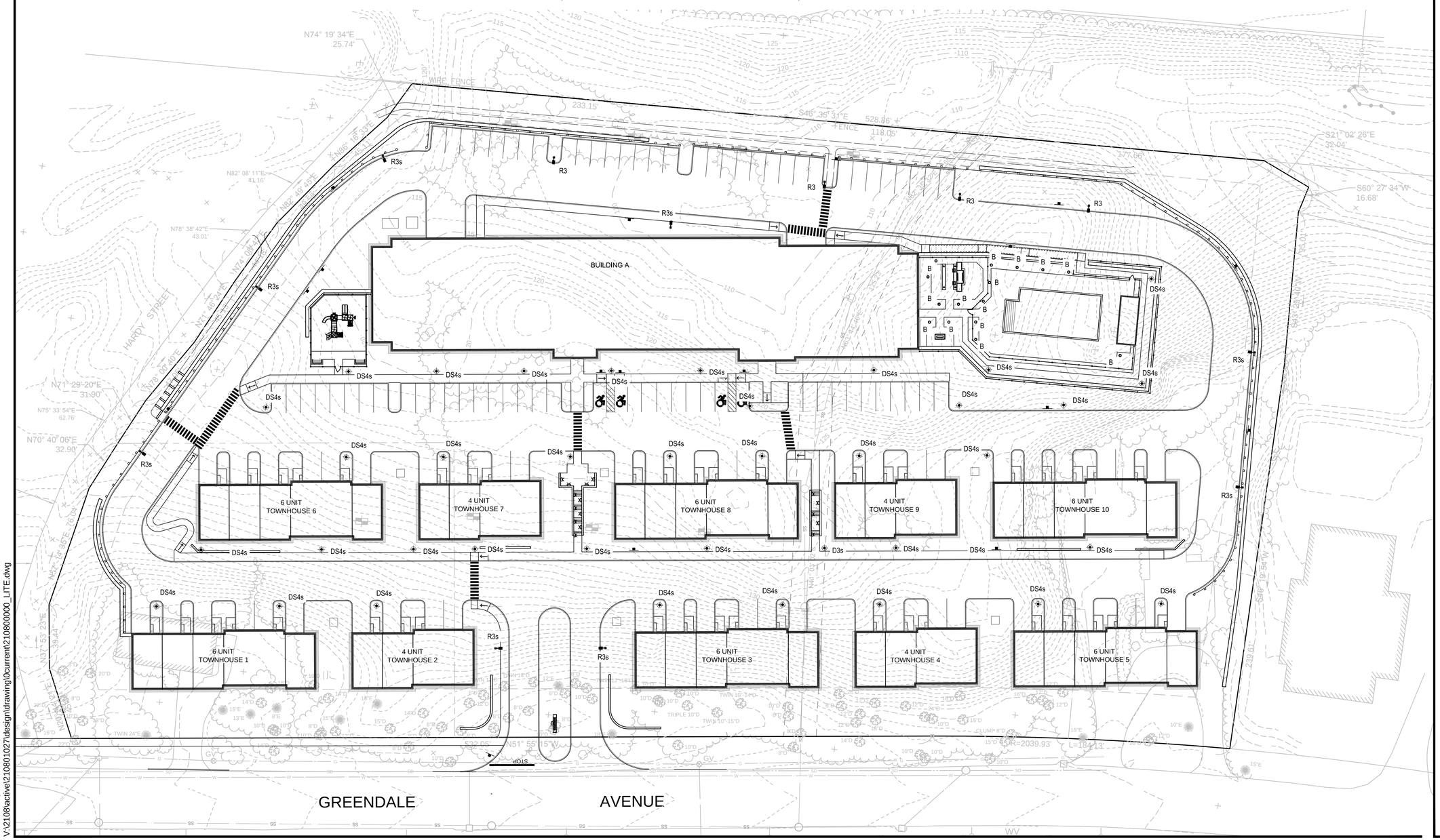

tat | the architectural team

The Architectural Team, Inc.
50 Commandant's Way at Admiral's Hill
Chelsea MA 02150
T 617.889.4402
F 617.884.4329
www.architecturalteam.com

©2011 The Architectural Team, Inc.

Consultant:

Stantec
226 Causeway Street, 6th Floor
Boston, MA 02114
Tel. 617.523.8103
www.stantec.com

Revision:

Architect of Record:

Drawn: JDM
Checked: MN
Scale: 1"=30'-0"
Key Plan:

Project Name:
Modera Needham

Greendale Avenue
Needham, MA

Sheet Name:
LANDSCAPE PLANS - LIGHTING LAYOUT PLAN

Project Number:
210801027

Issue Date:
October 28, 2015

Sheet Number:
L-200

Wednesday, October 28, 2015 2:24:29 PM
V:\2108\active\210801027\design\drawing\0current\210800000_LITE.dwg

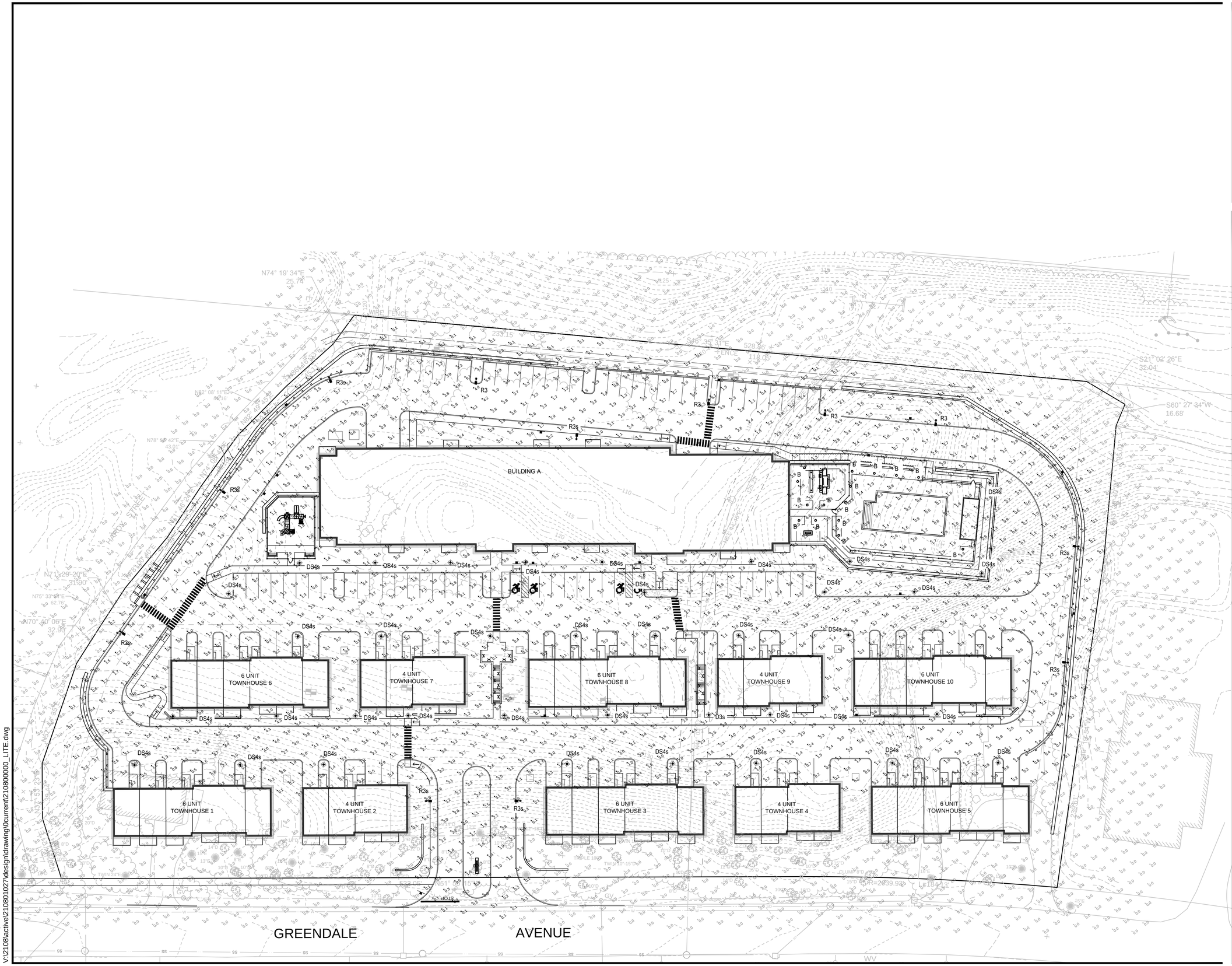

Wednesday, October 28, 2015 2:25:13 PM
V:\2108\active\210801027\design\drawing\0current\210800000_LITE.dwg

tat | the architectural team

The Architectural Team, Inc.
50 Commandant's Way at Admiral's Hill
Chelsea MA 02150
T 617.889.4402
F 617.884.4329
www.architecturalteam.com

©2011 The Architectural Team, Inc.

Consultant:

Stantec
226 Causeway Street, 6th Floor
Boston, MA 02114
Tel. 617.523.8103
www.stantec.com

Revision:

Architect of Record:

Drawn: JDM
Checked: MN
Scale: 1"=30'-0"
Key Plan:

Project Name:
Modera Needham

Greendale Avenue
Needham, MA

Sheet Name:
LANDSCAPE PLANS - PHOTOMETRIC PLAN

Project Number:
210801027

Issue Date:
October 28, 2015

Sheet Number:
L-201

PLANT SCHEDULE

SYM	QTY.	BOTANICAL NAME	COMMON NAME	SIZE	NOTES
	66	DECIDUOUS TREES			
ARO	14	ACER RUBRUM 'OCTOBER GLORY'	RED MAPLE	3 1/2" to 4"cal.	
AS	5	ACER SACCHARUM 'GREEN MOUNTAIN'	SUGAR MAPLE	3 1/2" to 4"cal.	
BN	6	BETULA NIGRA 'HERITAGE'	RIVER BIRCH	3 1/2" to 4"cal.	MULTI-STEM
CT	15	GLEDITSIA TRIACANTHOS INERMIS 'SKYLINE'	HONEYLOCUST	3 1/2" to 4"cal.	
LT	3	LIRIODENDRON TULIPIFERA	TULIPTREE	3 1/2" to 4"cal.	
QM	5	QUERCUS MACROCARPA	BUR OAK	3 1/2" to 4"cal.	
QP	1	QUERCUS PALUSTRIS	PIN OAK	3 1/2" to 4"cal.	
QPG	4	QUERCUS PALUSTRIS 'GREEN PILLAR'	EMERALD PILLAR OAK	3 1/2" to 4"cal.	
UH	13	ULMUS 'HOLMSTEAD'	HOLMSTEAD ELM	3 1/2" to 4"cal.	
	36	ORNAMENTAL / FLOWERING TREES			
BJ	4	BETULA PLATYPHYLLA JAPONICA 'WHITESPIRE'	ASIAN WHITE BIRCH	12-14' B&B	MULTI-STEM
CC	4	CERCIS CANADENSIS	EASTERN REDBUD	2" to 2 1/2"cal.	
CFB	4	CARPINUS BETULUS 'FASTIGIATA'	EUROPEAN HORNBEAM	2" to 2 1/2"cal.	
CK	11	CORNUS KOUSA 'HEART THROB'	KOUSA DOGWOOD	2" to 2 1/2" cal.	
CNG	5	CHAMAECYPARIS NOOTKATENSIS 'GREEN ARROW'	FALSECYPRESS	7-8' HT.	
MDY	2	MALUS 'DONALD WYMAN'	CRABAPPLE	2" to 2 1/2"cal.	
PYC	6	PYRUS CALLERYANA 'ARISTOCRAT'	ARISTOCRAT PEAR	3" to 3 1/2"cal.	
	70	EVERGREEN TREES			
AK	19	ABIES KOREANA	KOREAN FIR	6-7' HT.	
PC	8	PINUS CEMBRA	SWISS STONE PINE	6-7' HT.	
PG	15	PICEA GLAUCA	WHITE SPRUCE	6-9' HT.	
PN	6	PINUS NIGRA	AUSTRIAN PINE	7-8' HT.	
PO	6	PICEA OMORIKA	SERBIAN SPRUCE	7-8' HT.	
PP	5	PICEA PUNGENA 'HOOPSII'	COLORADO BLUE SPRUCE	6-9' HT.	
PS	11	PINUS STROBUS	WHITE PINE	7-8' HT.	

EXISTING TREE:
BASED UPON PROPOSED SITE GRADING AND EXISTING TREE LOCATION THESE NOTED TREES MAY BE ABLE TO BE SAVED. FURTHER REVIEW OF THE GRADING AND CURRENT HEALTH OF THE PLANT MATERIAL SHALL BE CONDUCTED BY THE LANDSCAPE ARCHITECT TO DETERMINE IF THE TREE IS TO BE SAVED.

SYM	QTY.	BOTANICAL NAME	COMMON NAME	SIZE	NOTES
	774	EVERGREEN SHRUBS			
AZD		AZALEA KAEMPFERI 'DELAWARE VALLEY WHITE'	AZALEA	24"-30" B&B	
AZF		AZALEA 'GIRARDS FUCHSIA'	AZALEA	24"-30" B&B	
BM		BUXUS MICROPHYLLA 'GREEN VELVET'	LITTLELEAF BOXWOOD	18"-24" B&B	
ICS		ILEX CRENATA 'STEEDS'	JAPENESE HOLLY	24"-30" B&B	
ISC		ILEX GLABRA 'COMPACTA'	COMPACT INKBERRY	24"-30" B&B	
IM		ILEX MESERVAE 'CHINA GIRL'	MESERVE HOLLY	3'-4' B&B	
JP		JUNIPERUS PFITZERIANA ANGULICA BLUE	PFITZER JUNIPER	45 CONT.	
JC		JUNIPERUS CHINENSIS 'GOLD LACE'	CHINESE JUNIPER	3'-4' B&B	
RA		RHODODENDRON 'ANY COTTA'	RHODODENDRON	24"-30" B&B	
RB		RHODODENDRON BOULE DE NEIGE	RHODODENDRON	36"-42" B&B	
RC		RHODODENDRON 'CHONODES'	RHODODENDRON	36"-42" B&B	
TG		TAXUS CUSPIDATA 'GREENWALE'	GREENWALE YEW	24"-30" B&B	
TGC		TAXUS CUSPIDATA 'COLUMNARIS'	UPRIGHT YEW	30"-36" B&B	
	448	DECIDUOUS SHRUBS			
AP		AESCULUS PARVIFLORA	BOTTLEBRUSH BUCKEYE	3'-4' B&B	
CA		CLETHRA ALNIFOLIA 'COMPACTA'	SUMMERSWEET CLETHRA	2 1/2"-3' HT	
CO		CORNUS ALBA 'IVORY HALO'	RED-TWIGGED DOGWOOD	2 1/2"-3' HT	
FG		FOTHERGILLA GARDENI	DWARF FOTHERGILLA	2 1/2"-3' HT	
HV		HAMAMELIS VIRGINIANA	WITCH HAZEL	3'-3 1/2' HT	
HY		HYDRANGEA MACROPHYLLA 'ENDLESS SUMMER'	HYDRANGEA	2 1/2"-3' HT	
IV		ITEA VIRGINICA 'HENRY'S GARNET'	SWEETSPIRE	2 1/2"-3' HT	
SJS		SPIREA JAPONICA 'SHROBB'	PEPERMINTSTICK SPIREA	2'-2 1/2' HT	
VC		VIBURNUM CARLESII	KOREAN SPICE VIBURNUM	3-4' HT.	
VR		VIBURNUM DENTATUM 'BLUE MUFFIN'	ARROWWOOD VIBURNUM	2 1/2"-3' HT	
VP		VIBURNUM PLICATUM TOMENTOSUM 'SHASTA'	DOUBLEFILE VIBURNUM	3-4' HT.	

SYM	QTY.	BOTANICAL NAME	COMMON NAME	SIZE	NOTES
		ORNAMENTAL GRASSES			
NOTE:		PLANTS NOT SHOWN ON THE PLAN TO BE LOCATED BY THE LANDSCAPE ARCHITECT			
CKF		CALAMAGROSTIS x ACUTIFLORA 'KARL FOERSTER'	FEATHER REED GRASS	2 YR. @ POT	24" O.C.
HMA		HAKONECHLOA MACRA 'AUREOLA'	HAKONE GRASS	2 YR. @ POT	15" O.C.
MGR		MISCANTHUS SINENSIS 'GOLD BAR'	JAPANESE SILVER GRASS	2 YR. @ POT	36" O.C.
MML		MISCANTHUS SINENSIS 'MORNING LIGHT'	JAPANESE SILVER GRASS	2 YR. @ POT	36" O.C.
PAH		PENNISETUM ALOPECUROIDES 'HAMELIN'	DWARF FOUNTAIN GRASS	2 YR. @ POT	24" O.C.
		HERBACEOUS PERENNIALS			
NOTE:		PLANTS NOT SHOWN ON THE PLAN TO BE LOCATED BY THE LANDSCAPE ARCHITECT			
M1		MIX 1			
		CHRYSANTHEMUM MAXIMUM 'BECKY'	SHASTA DAISY	2 YR. @ POT	24" O.C.
		GAILLARDIA 'GOBLIN'	BLANKET FLOWER	2 YR. @ POT	18" O.C.
		HEMEROCALLUS 'STELLA D'ORO'	STELLA D'ORO DAYLILY	2 YR. @ POT	15" O.C.
		RUDBECKIA FULGIDA 'GOLDSTURM'	BLACK-EYED SUSAN	2 YR. @ POT	18" O.C.
		SALVIA NEMOROSA 'MAY NIGHT'	SAGE	2 YR. @ POT	18" O.C.
		SEDUM 'AUTUMN JOY'	STONECROP	2 YR. @ POT	24" O.C.
M2		MIX 2			
		ATHYRIUM FILIX-FEMINA	LADY FERN	2 YR. @ POT	18" O.C.
		HEUCHERA 'GREEN SPICE'	CORAL BELLS	2 YR. @ POT	18" O.C.
		HOSTA 'PATRIOT'	HOSTA	2 YR. @ POT	24" O.C.
		HOSTA 'GUACAMOLE'	HOSTA	2 YR. @ POT	30" O.C.
		HOSTA 'SIEBOLDIANA 'ELEGANS'	HOSTA	2 YR. @ POT	24" O.C.
M3		MIX 3			
		ACHILLEA x 'MOONSHINE	YARROW	2 YR. @ POT	15" O.C.
		GAILLARDIA 'GOBLIN'	BLANKET FLOWER	2 YR. @ POT	12" O.C.
		PEROVSKIA ATRIPLICIFOLIA 'LITTLE SPIRE'	RUSSIAN SAGE	2 YR. @ POT	30" O.C.
AA		ASTILBE X ARENDSII	ASTILBE 'BRIDAL VEIL'	2 YR. @ POT	18" O.C.
HU		HEUCHERA 'GREEN SPICE'	CORAL BELLS	2 YR. @ POT	18" O.C.
HG		HOSTA 'PATRIOT'	HOSTA	2 YR. @ POT	15" O.C.
HH		HEMEROCALLIS 'HAPPY RETURNS'	DAYLILY	2 YR. @ POT	30" O.C.
LE		LIRIOPE MUSCARI	LILYTURF	2" PLUGS	8" O.C.
RF		RUDBECKIA FULGIDA 'GOLDSTURM'	BLACK-EYED SUSAN	2 YR. @ POT	18" O.C.
SA		SEDUM 'AUTUMN JOY'	STONECROP	2 YR. @ POT	18" O.C.
		VINES – NOT SHOWN ON PLANS. TO BE LOCATED BY LANDSCAPE ARCHITECT			
VI		PARTHENOCISSUS TRICUSPIDATA	BOSTON IVY	2" PLUGS	12" O.C.
VZ		VINCA MINOR	PERIWINKLE	2" PLUGS	10" O.C.

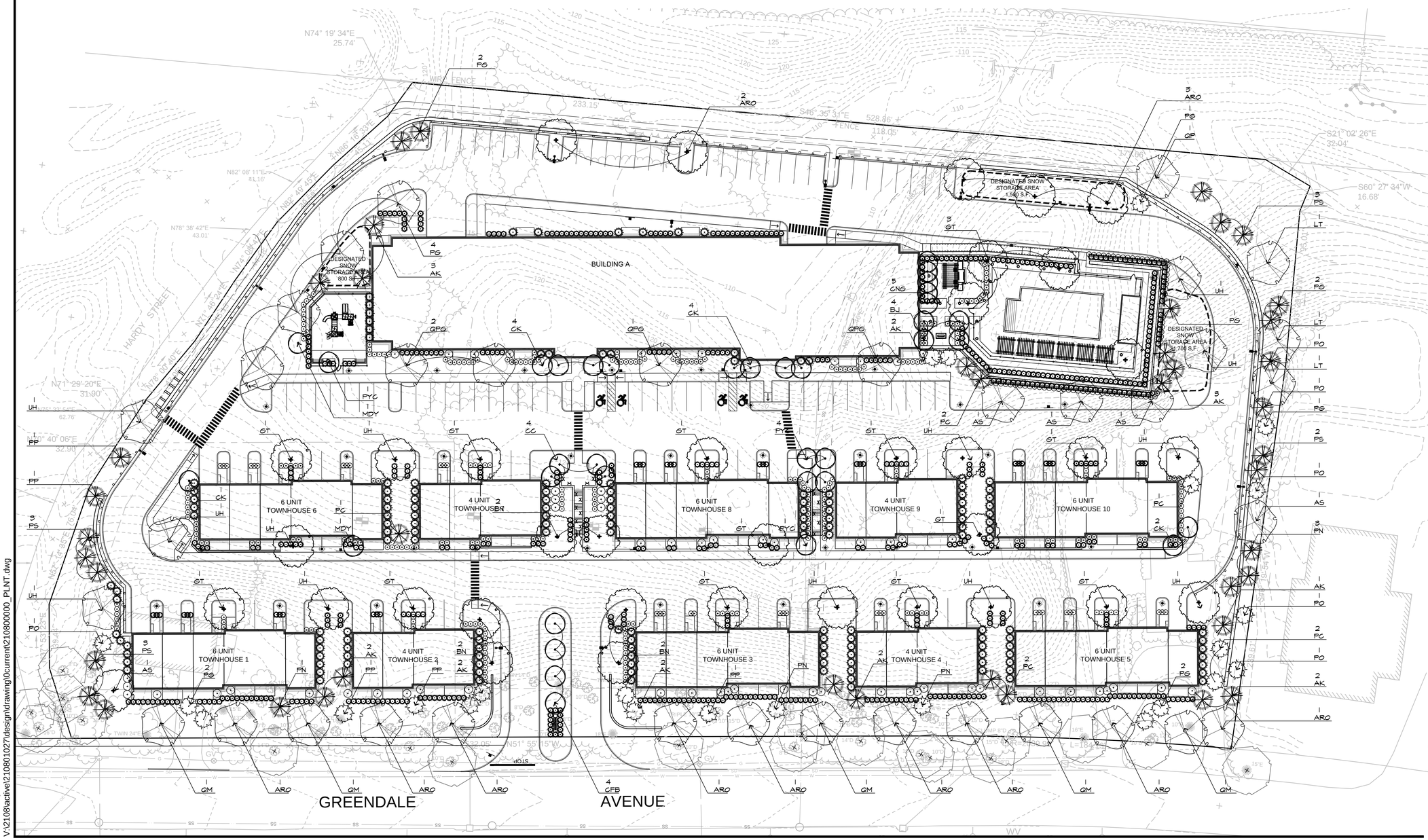

Wednesday, October 28, 2015 2:29:28 PM
V:\21080\active\210801027\design\drawing\0current\210800000_PLNT.dwg

tat | the architectural team

The Architectural Team, Inc.
50 Commandant's Way at Admiral's Hill
Chelsea MA 02150
T 617.889.4402
F 617.884.4329
www.architecturalteam.com

©2011 The Architectural Team, Inc.

Consultant:

Stantec
226 Causeway Street, 6th Floor
Boston, MA 02114
Tel. 617.523.8103
www.stantec.com

Revision:

Architect of Record:

Drawn: JDM
Checked: MN
Scale: 1"=30'-0"
Key Plan:

MASSACHUSETTS JOSHUA D. MILLIGAN REGISTERED LANDSCAPE ARCHITECT

Project Name:
Modera Needham

Greendale Avenue
Needham, MA

Sheet Name:
LANDSCAPE PLANS - PLANTING PLAN - TREES

Project Number:
210801027

Issue Date:
October 28, 2015

Sheet Number:
L-300

	A	B	*
CONCRETE WALK	8"	4"	
HEAVY DUTY PVMT	12"	6"	

*SUBJECT TO FINAL GEOTECHNICAL RECOMMENDATIONS

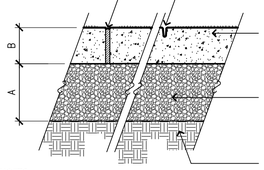

½" EXPANSION JOINT WITH PRE-MOULDED FILLER. RECESS FILLER ½". PROVIDE JOINTS AT 50' O.C. MAX. UNLESS OTHERWISE NOTED. PROVIDE EXPANSION JOINT WHERE PAVEMENT ABUTS STRUCTURES, VERTICAL SURFACES, AND AS NOTED. SEAL ALL EXPANSION JOINTS WITH APPROVED WATERPROOF SEALANT

SAW CUT JOINT ¼ TIMES THE DEPTH OF THE SLAB, WITH 2" WIDE SMOOTH STRIP ON EACH SIDE. LAYOUT AS INDICATED ON PLAN

CONCRETE PAVEMENT REINFORCED WITH 100% VIRGIN POLYPROPYLENE FIBRILLATED FIBERS. (1.5 LBS. FIBERS PER 1 CU. YARD)

AGGREGATE BASE COURSE

COMPACTED SUBGRADE

NOTES:

PROVIDE LIGHT BROOM FINISH PERPENDICULAR TO THE TRAFFIC FLOW UNLESS OTHERWISE NOTED

1 CONCRETE PAVING

SCALE: 1 1/2"=1'-0"

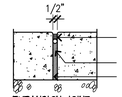

EXPANSION JOINT

SPECIFIED SEALANT, COLOR TO MATCH PAVEMENT, MIN 1/2" DEPTH

BACKER ROD

PREMOLDED EXPANSION JOINT, CUT BACK AS NECESSARY AFTER POUR TO ACCEPT BACKER ROD AND SEALANT

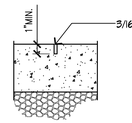

3/16" SAW CUT JOINT

CONTROL JOINT

INSTALLATION NOTES FOR ALL JOINTS:

1. EXPANSION JOINTS 20'-0" O.C. UNLESS SHOWN OTHERWISE
2. CONTROL JOINTS SPACING SHALL BE AS SHOWN ON PLANS
3. WHERE POSSIBLE, PLACE ALL JOINTS (EXPANSION AND CONTROL) IN THE STAMPED JOINT PATTERN

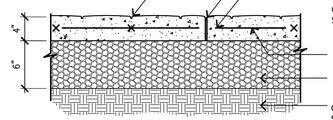

STAMPED PATTERN, SEE SPEC AND PLAN FOR PATTERN

EXPANSION OR CONTROL JOINT

4000 PSI CONCRETE WITH INTEGRAL COLOR ADMIXTURE FOR FINISH, SEE SPEC.

6 x 6 W 2.9 x 2.9 W WIRE MESH

AGGREGATE BASE COURSE

COMPACTED OR UNDISTURBED SUBGRADE

NOTE: POOL DECK TO BE 6" CONCRETE WITH 8" GRAVEL BASE. WALKWAYS TO BE 4" CONCRETE WITH 6" GRAVEL BASE.

2 STAMPED CONCRETE

SCALE: 1"=1'-0"

Pattern Selection Guide

Bomanite The Paving Innovators

BOMACRON TOOLS
Coquina

TL-02090 Coquina Frayed Edge (4 1/2' X 4 1/2')

A random blend of sea shells over a background similar to a travertine or coarse rock salt finish. Light in texture with moderate depth of relief and no veining. Typically installed as continuous texture or in a tiles with fine grout lines.

Tool size:	4 1/2' x 4 1/2'
Stone Size:	N/A
Joint Detail:	N/A
Stone Relief Dimensions:	0.149

Coquina Texture

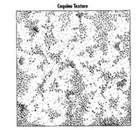

3 POOL DECK STAMP PATTERN

NOT TO SCALE

Pattern Selection Guide

Bomanite The Paving Innovators

BOMACRON TOOLS
English Slate

TL-03290 English Slate Frayed Edge (4 1/2' X 4 1/2')

A versatile texture of "riven" slate with moderate depth of relief and minimal veining. Appropriate for all applications where consistent depth of impression and texture are desired. Set in a wide range of patterns from a random ashlar pattern to a random stone version with multiple tool designs and sizes.

Tool size:	4 1/2' x 4 1/2'
Stone Size:	N/A
Joint Detail:	N/A
Stone Relief Dimensions:	0.192

English Slate Texture

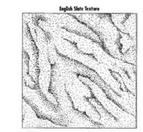

4 SITE WALK STAMP PATTERN

NOT TO SCALE

Pattern Selection Guide

Bomanite The Paving Innovators

BOMACRON TOOLS
Canyon Stone

TL-01040 Canyon Stone Frayed Edge (4 1/2' X 4 1/2')

A coarse texture mimicking large worn rock surfaces with little veining and fairly substantial depth of relief. Typically set in a random stone pattern that is appropriate for areas where an uneven, rustic surface is desired.

Tool size:	4 1/2' x 4 1/2'
Stone Size:	N/A
Joint Detail:	N/A
Stone Relief Dimensions:	0.256

Canyon Stone Texture

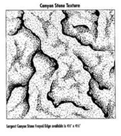

5 SITE AMENITY AREAS STAMP PATTERN

NOT TO SCALE

NOTE:
SUBMIT STONE SAMPLES FOR APPROVAL BY LANDSCAPE ARCHITECT PRIOR TO INSTALLATION

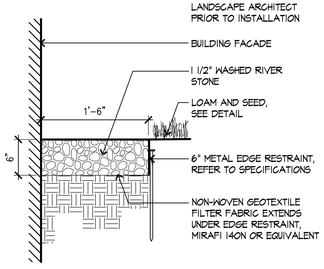

BUILDING FACADE

1 1/2" WASHED RIVER STONE

LOAM AND SEED, SEE DETAIL

6" METAL EDGE RESTRAINT, REFER TO SPECIFICATIONS

NON-WOVEN GEOTEXTILE FILTER FABRIC EXTENDS UNDER EDGE RESTRAINT, MIRAFI 140N OR EQUIVALENT

6 STONE STRIP AT BUILDING EDGE

SCALE: 1"=1'-0"

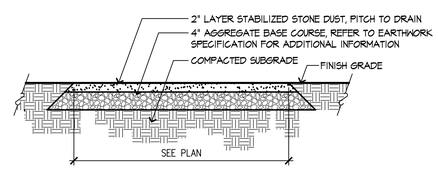

2" LAYER STABILIZED STONE DUST, PITCH TO DRAIN

4" AGGREGATE BASE COURSE, REFER TO EARTHWORK SPECIFICATION FOR ADDITIONAL INFORMATION

COMPACTED SUBGRADE

FINISH GRADE

7 STABILIZED STONEDUST PAVING

SCALE: 3/4"=1'-0"

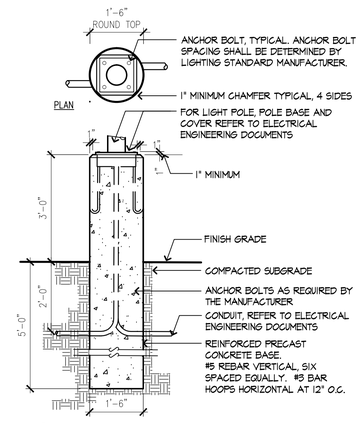

ANCHOR BOLT, TYPICAL. ANCHOR BOLT SPACING SHALL BE DETERMINED BY LIGHTING STANDARD MANUFACTURER.

1" MINIMUM CHAMFER TYPICAL, 4 SIDES

FOR LIGHT POLE, POLE BASE AND COVER REFER TO ELECTRICAL ENGINEERING DOCUMENTS

1" MINIMUM

FINISH GRADE

COMPACTED SUBGRADE

ANCHOR BOLTS AS REQUIRED BY THE MANUFACTURER

CONDUIT, REFER TO ELECTRICAL ENGINEERING DOCUMENTS

REINFORCED PRECAST CONCRETE BASE. #5 REBAR VERTICAL, SIX SPACED EQUALLY. #3 BAR HOOPS HORIZONTAL AT 12" O.C.

8 LIGHT POLE BASE - VEHICULAR

SCALE: 1/2"=1'-0"

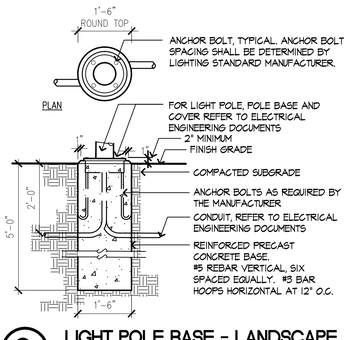

ANCHOR BOLT, TYPICAL. ANCHOR BOLT SPACING SHALL BE DETERMINED BY LIGHTING STANDARD MANUFACTURER.

FOR LIGHT POLE, POLE BASE AND COVER REFER TO ELECTRICAL ENGINEERING DOCUMENTS

2" MINIMUM

FINISH GRADE

COMPACTED SUBGRADE

ANCHOR BOLTS AS REQUIRED BY THE MANUFACTURER

CONDUIT, REFER TO ELECTRICAL ENGINEERING DOCUMENTS

REINFORCED PRECAST CONCRETE BASE. #5 REBAR VERTICAL, SIX SPACED EQUALLY. #3 BAR HOOPS HORIZONTAL AT 12" O.C.

9 LIGHT POLE BASE - LANDSCAPE

SCALE: 1/2"=1'-0"

10 SITE LIGHT - WALKWAY FIXTURE

SCALE: 1"=1'-0"

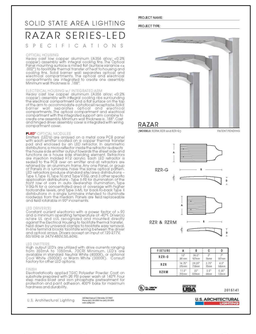

11 SITE LIGHT - PARKING LOT FIXTURE

SCALE: 1"=1'-0"

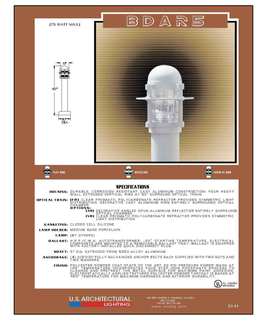

12 SITE LIGHT - BOLLARD LIGHT

SCALE: 1"=1'-0"

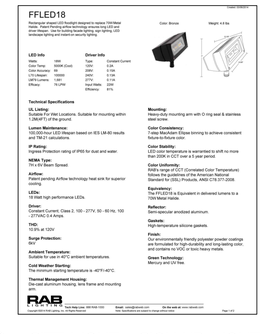

13 SITE LIGHT - SIGN UP-LIGHT

SCALE: 1"=1'-0"

14 SITE LIGHT - WALL LIGHT

SCALE: 1"=1'-0"

tat | the architectural team

The Architectural Team, Inc.
50 Commandant's Way at Admiral's Hill
Chelsea MA 02150
T 617.889.4402
F 617.884.4329
www.architecturalteam.com

©2011 The Architectural Team, Inc.

Consultant:

Stantec
226 Causeway Street, 6th Floor
Boston, MA 02114
Tel. 617.523.8103
www.stantec.com

Revision:

Architect of Record:

Drawn: JDM
Checked: MN
Scale: AS NOTED
Key Plan:

Project Name:
Modera Needham

Greendale Avenue
Needham, MA

Sheet Name:
LANDSCAPE PLANS - SITE DETAILS

Project Number:
210801027

Issue Date:
October 28, 2015

Sheet Number:
L-400

Wednesday, October 28, 2015 2:43:22 PM
V:\210\active\210801027\design\drawing\0current\210800000_DETL.dwg

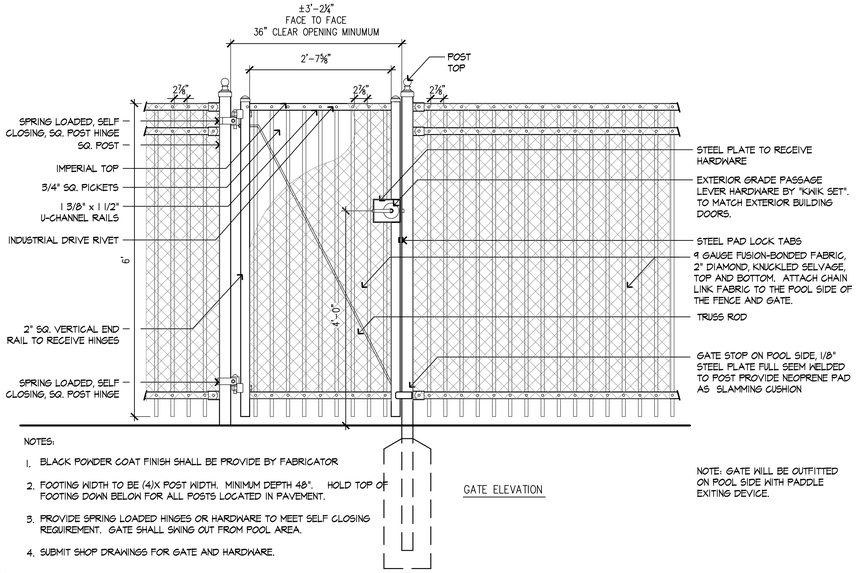

NOTES:

1. BLACK POWDER COAT FINISH SHALL BE PROVIDE BY FABRICATOR
2. FOOTING WIDTH TO BE (4)X POST WIDTH. MINIMUM DEPTH 48". HOLD TOP OF FOOTING DOWN BELOW FOR ALL POSTS LOCATED IN PAVEMENT.
3. PROVIDE SPRING LOADED HINGES OR HARDWARE TO MEET SELF CLOSING REQUIREMENT. GATE SHALL SWING OUT FROM POOL AREA.
4. SUBMIT SHOP DRAWINGS FOR GATE AND HARDWARE.

GATE ELEVATION

NOTE: GATE WILL BE OUTFITTED ON POOL SIDE WITH PADDLE EXITING DEVICE.

1 METAL PICKET POOL FENCE AND GATE

SCALE: 3/4"=1'–0"

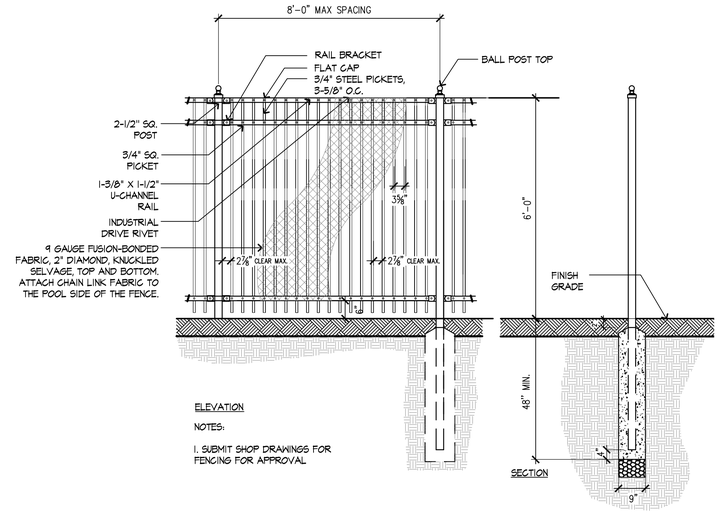

ELEVATION

NOTES:

1. SUBMIT SHOP DRAWINGS FOR FENCING FOR APPROVAL

SECTION

2 METAL PICKET POOL FENCE

SCALE: 1/2"=1'–0"

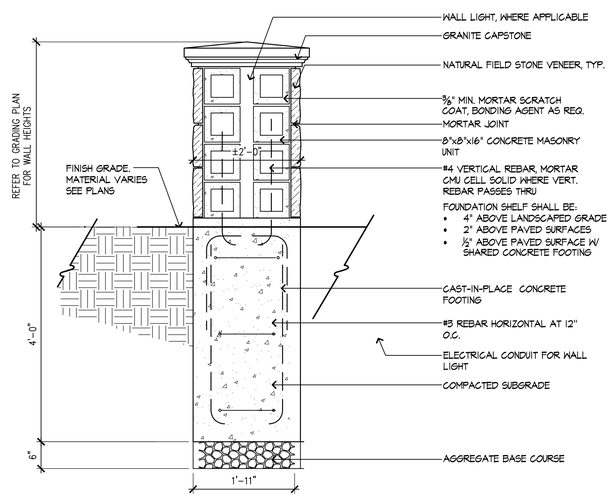

4 STONE VENEER PIER AND CAP

SCALE: 3/4"=1'–0"

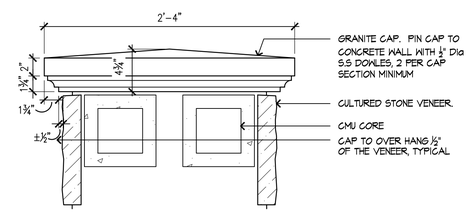

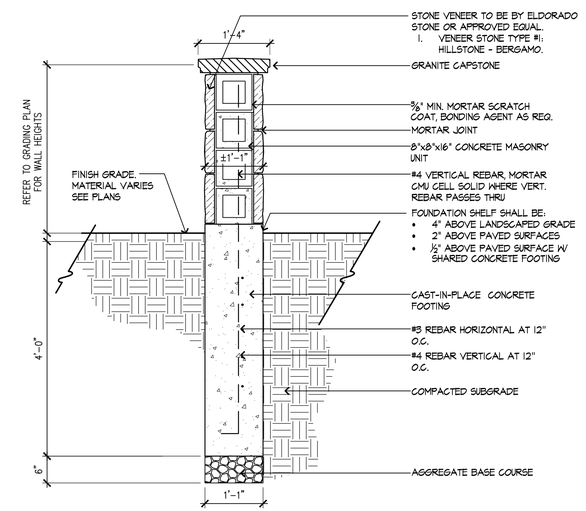

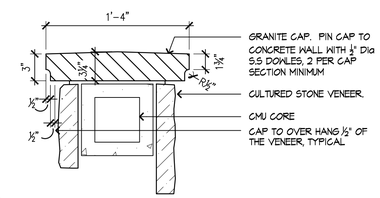

5 STONE VENEER WALL AND CAP

SCALE: 3/4"=1'–0"

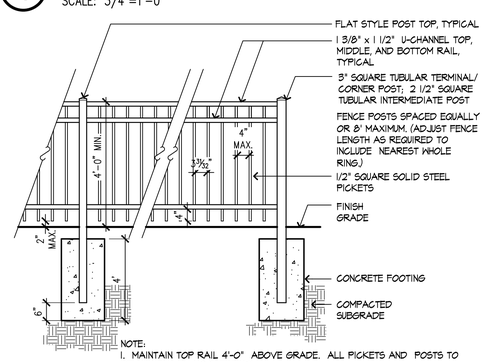

NOTE:

1. MAINTAIN TOP RAIL 4'-0" ABOVE GRADE. ALL PICKETS AND POSTS TO REMAIN PLUMB; NO STEPPING

6 METAL PICKET FENCE

SCALE: 1/2"=1'–0"

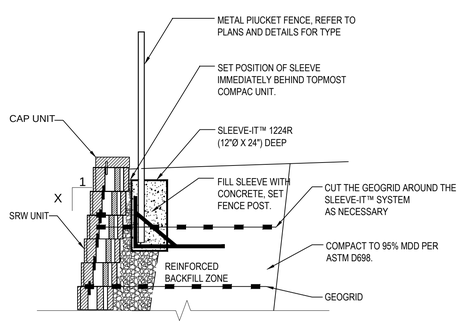

7 FENCE FOOTING SYSTEM AT RETAINING WALLS

SCALE: 3/4"=1'–0"

tat | the architectural team

The Architectural Team, Inc.
50 Commandant's Way at Admiral's Hill
Chelsea MA 02150
T 617.889.4402
F 617.884.4329
www.architectuteralteam.com

©2011 The Architectural Team, Inc.

Consultant:

Stantec
226 Causeway Street, 6th Floor
Boston, MA 02114
Tel. 617.523.8103
www.stantec.com

Revision:

Architect of Record:

Drawn: JDM
Checked: MN
Scale: AS NOTED
Key Plan:

Project Name:
Modera Needham

Greendale Avenue
Needham, MA

Sheet Name:
LANDSCAPE PLANS - SITE DETAILS

Project Number:
210801027

Issue Date:
October 28, 2015

Sheet Number:
L-401

Wednesday, October 28, 2015 2:42:52 PM
V:\210801027\design\drawing\current\210800000_DETL.dwg

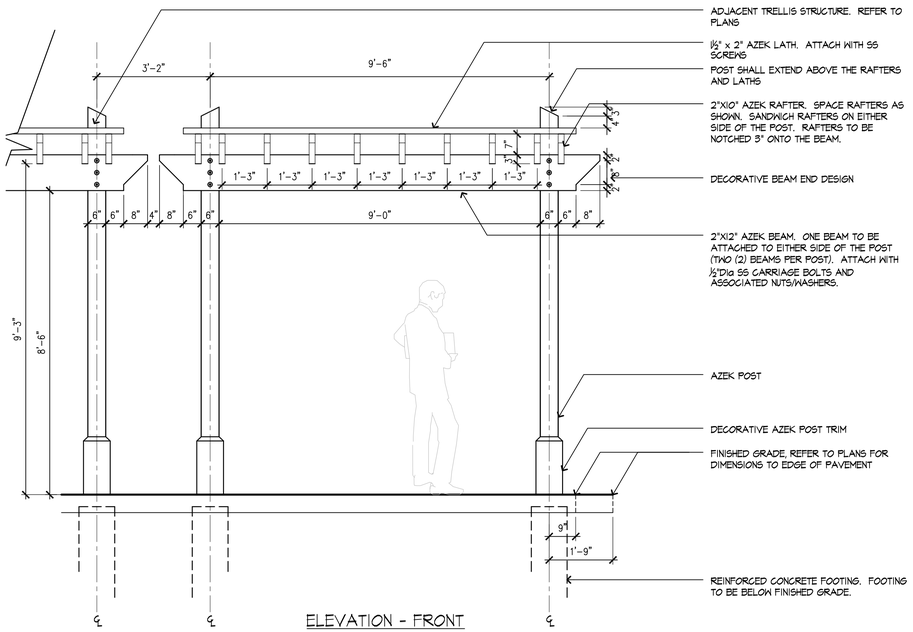

ELEVATION - FRONT

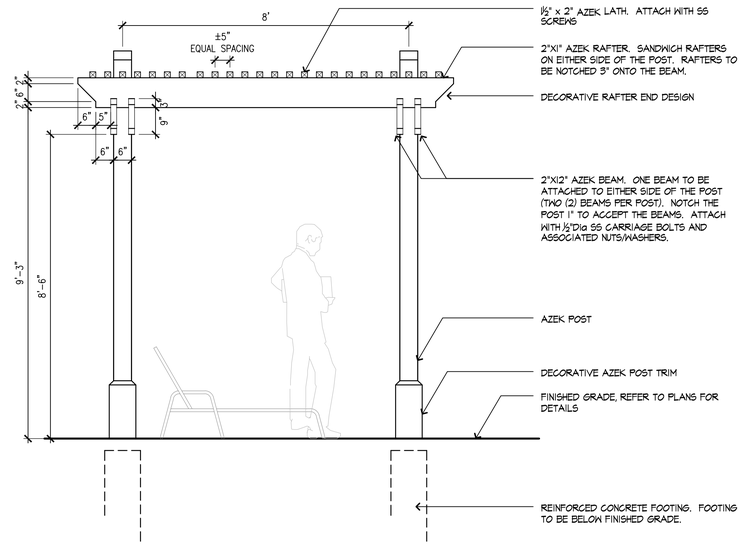

ELEVATION - SIDE

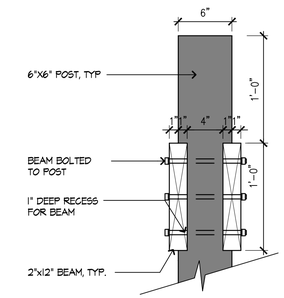

SECTION - BEAM & POST

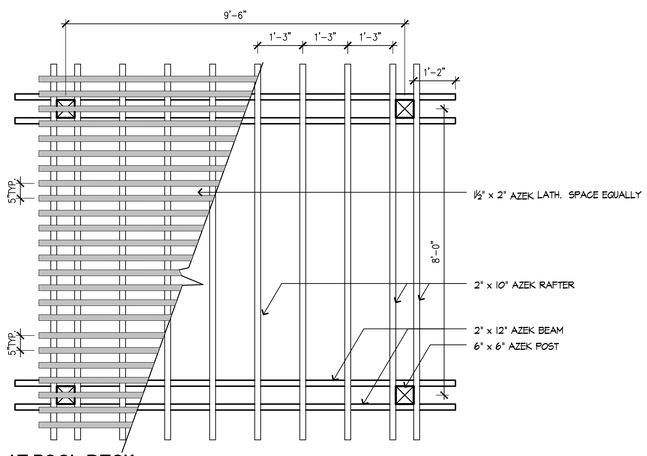

1 TRELLIS STRUCTURE AT POOL DECK

SCALE: NTS

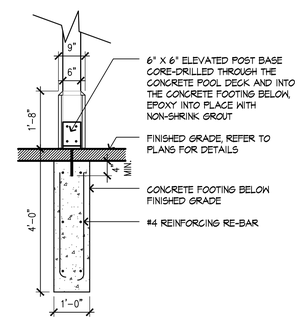

SECTION - POST ATTACHMENT

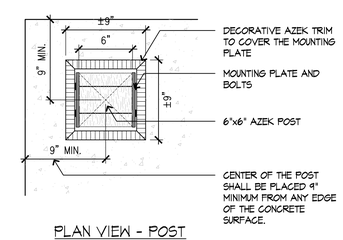

PLAN VIEW - POST ATTACHMENT

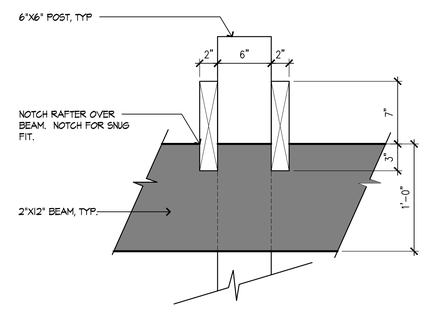

ELEVATION - BEAM & RAFTER

NOTE:
1. TELEVISION TO BE SUNBRIGHT-TV MODEL 4170TEST1, MARQUEE SERIES. ADDITIONAL SPEAKER MODULE SB-SP3246.
2. OUTDOOR FIREPLACE TO BE SPARK MODEL SS48 VENT FREE.
3. PROVIDE TIMER SWITCH FOR AUTOMATIC GAS SHUT OFF FOR THE FIREPLACE

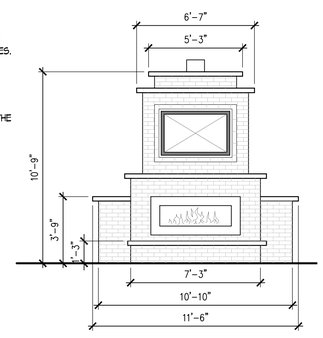

2 OUTDOOR FIREPLACE

SCALE: NTS

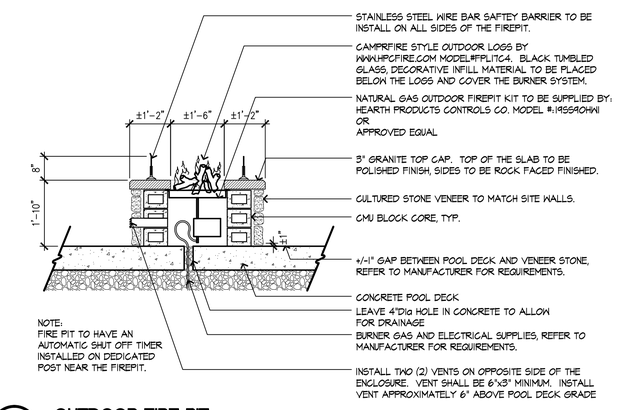

NOTE:
FIRE PIT TO HAVE AN AUTOMATIC SHUT OFF TIMER INSTALLED ON DEDICATED POST NEAR THE FIREPIT.

3 OUTDOOR FIRE PIT

SCALE: NTS

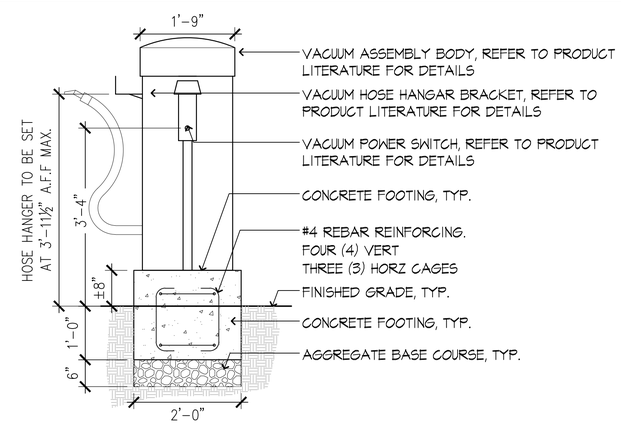

4 OUTDOOR VACUUM

SCALE: 3/4"=1'-0"

Wednesday, October 28, 2015 2:42:32 PM
V:\2108\active\210801027\design\drawing\0current\210800000_DETL.dwg

tat | the architectural team

The Architectural Team, Inc.
50 Commandant's Way at Admiral's Hill
Chelsea MA 02150
T 617.889.4402
F 617.884.4329
www.architecturalteam.com

©2011 The Architectural Team, Inc.

Consultant:

Stantec
226 Causeway Street, 6th Floor
Boston, MA 02114
Tel. 617.523.8103
www.stantec.com

Revision:

Architect of Record:

Drawn: JDM
Checked: MN
Scale: AS NOTED
Key Plan:

Project Name:
Modera Needham

Greendale Avenue
Needham, MA

Sheet Name:
LANDSCAPE PLANS - SITE DETAILS

Project Number:
210801027

Issue Date:
October 28, 2015

Sheet Number:
L-402

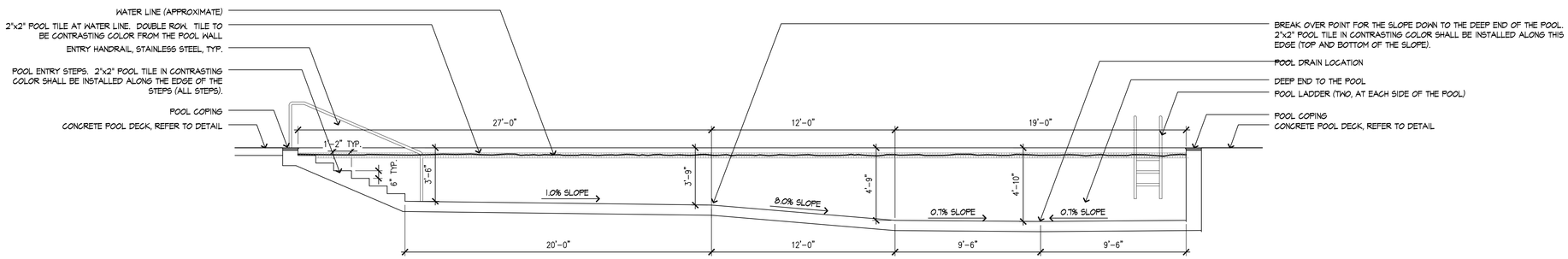

1 POOL SECTION - AA

SCALE: NTS

NOTE:
1. GRILL TO BE BROILMASTER MODEL BHAX-P3X BUILT-IN KIT WITH NATURAL GAS GRILL HEAD, OR AN APPROVED EQUAL
2. PROVIDE TIMER SWITCH FOR AUTOMATIC GRILL SHUT OFF
3. SURFACE OF GRILL SHALL BE SET AT 33-1/2" ABOVE WALKWAY

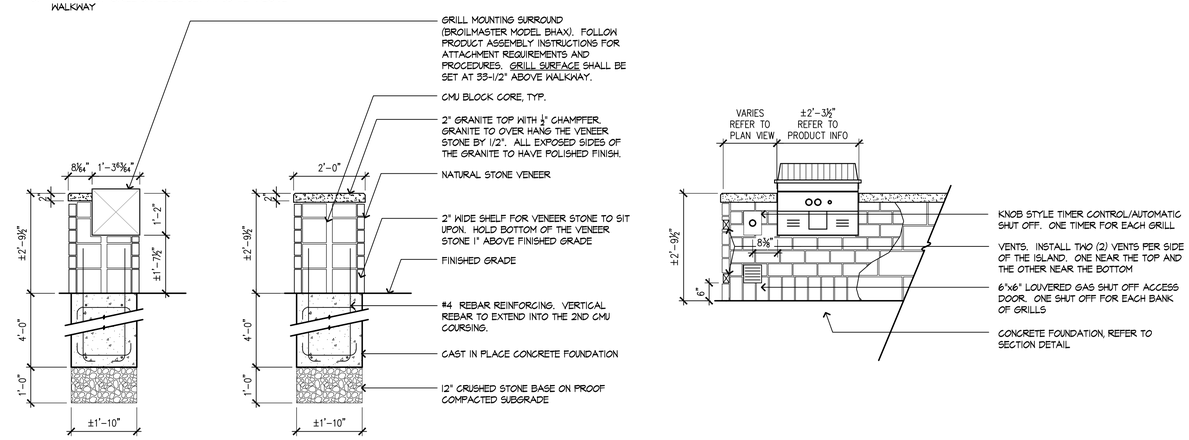

2 BUILT IN GAS GRILL-SECTION/ELEVATION

SCALE: 1/2"=1'-0"

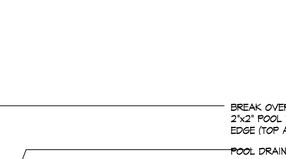

3 BIKE RACK

SCALE: 1/2"=1'-0"

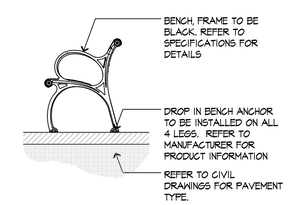

4 BENCH

SCALE: 1/2"=1'-0"

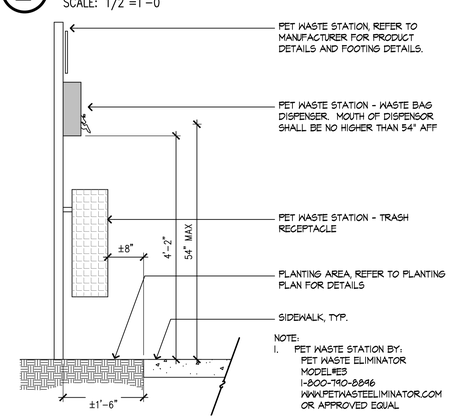

5 PET WASTE STATION

SCALE: 3/4"=1'-0"

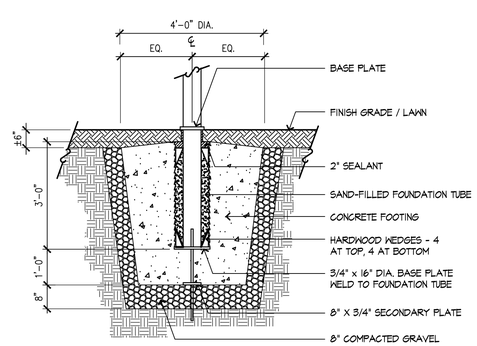

6 FLAGPOLE

SCALE: 3/4"=1'-0"

Wednesday, October 28, 2015 2:42:09 PM
V:\2108\active\210801027\design\drawing\0current\210800000_DETL.dwg

tat | the architectural team

The Architectural Team, Inc.
50 Commandant's Way at Admiral's Hill
Chelsea MA 02150
T 617.889.4402
F 617.884.4329
www.architecturalteam.com

©2011 The Architectural Team, Inc.

Consultant:

Stantec
226 Causeway Street, 6th Floor
Boston, MA 02114
Tel. 617.523.8103
www.stantec.com

Revision:

Architect of Record:

Drawn: JDM
Checked: MN
Scale: AS NOTED
Key Plan:

Project Name:
Modera Needham

Greendale Avenue
Needham, MA

Sheet Name:
LANDSCAPE PLANS - SITE DETAILS

Project Number:
210801027

Issue Date:
October 28, 2015

Sheet Number:
L-403

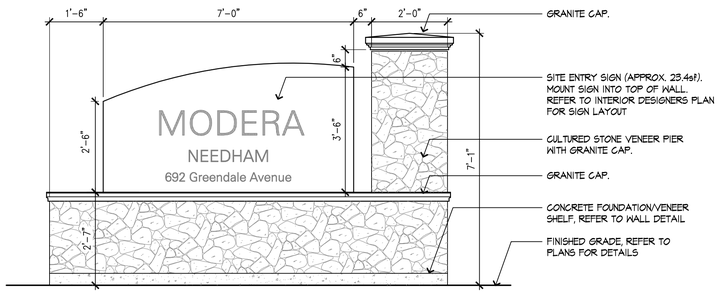

ELEVATION

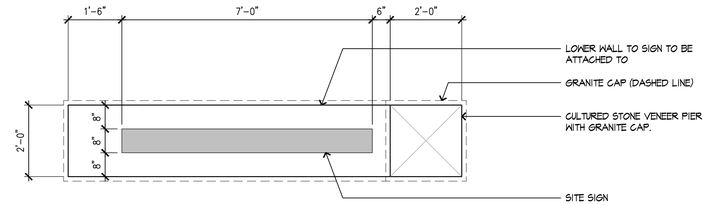

PLAN

1 MAIN ENTRY SIGN

SCALE: 1/2"=1'-0"

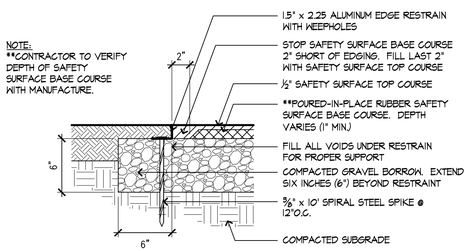

2 PLAYGROUND SAFETY SURFACING

SCALE: 1/2"=1'-0"

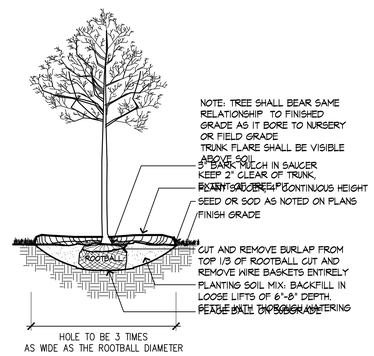

3 DECIDUOUS TREE PLANTING

SCALE: 1/4"=1'-0"

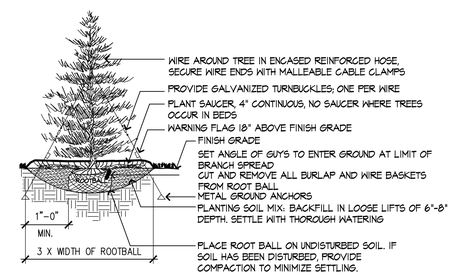

NOTE:

1. TREE SHALL BEAR SAME RELATIONSHIP TO FINISHED GRADE AS IT BORE TO NURSERY OR FIELD GRADE

2. INSTALL THREE GUYS PER TREE; EQUALLY SPACED AROUND BALL. ATTACH GUYS AT 2/3 HEIGHT OF TREE; USE DOUBLE STRAND GALVANIZED STEEL WIRE

4 EVERGREEN TREE PLANTING

SCALE: 1/8"=1'-0"

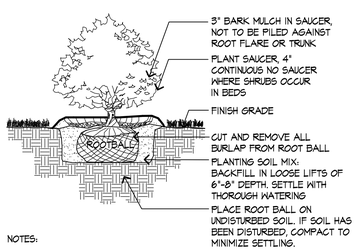

NOTES:

1. SHRUB SHALL BEAR SAME RELATIONSHIP TO FINISHED GRADE AS IT BORE TO NURSERY OR FIELD GRADE

2. WHERE SHRUBS OCCUR IN GROUPINGS IN PLANT BEDS, PROVIDE 2' DEEP CONTINUOUS LOAM BED.

5 DECIDUOUS SHRUB PLANTING

SCALE: 3/8"=1'-0"

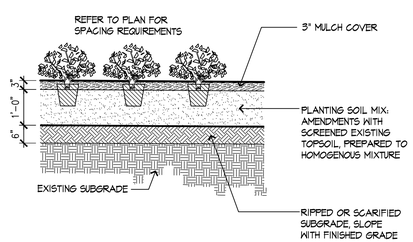

6 GROUNDCOVER AND PERENNIAL PLANTING

SCALE: 1/2"=1'-0"

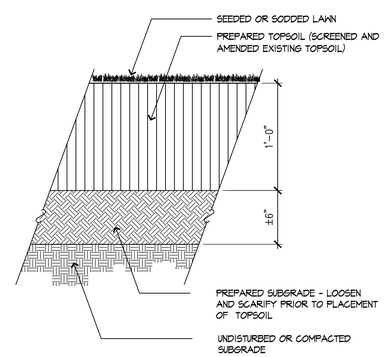

7 LOAM AND SEED/SOD

SCALE: 1 1/2"=1'-0"

Wednesday, October 28, 2015 2:40:12 PM
V:\210801027\design\drawing\current\210800000_DETL.dwg

tat | the architectural team

The Architectural Team, Inc.
50 Commandant's Way at Admiral's Hill
Chelsea MA 02150
T 617.889.4402
F 617.884.4329
www.architecturalteam.com

©2011 The Architectural Team, Inc.

Consultant:

Stantec
226 Causeway Street, 6th Floor
Boston, MA 02114
Tel. 617.523.8103
www.stantec.com

Revision:

Architect of Record:

Drawn: JDM
Checked: MN
Scale: AS NOTED
Key Plan:

Project Name:
Modera Needham

Greendale Avenue
Needham, MA

Sheet Name:
LANDSCAPE PLANS - SITE DETAILS

Project Number:
210801027

Issue Date:
October 28, 2015

Sheet Number:
L-404