Feasibility Study for the Future of Rosemary Pool

APPENDIX H

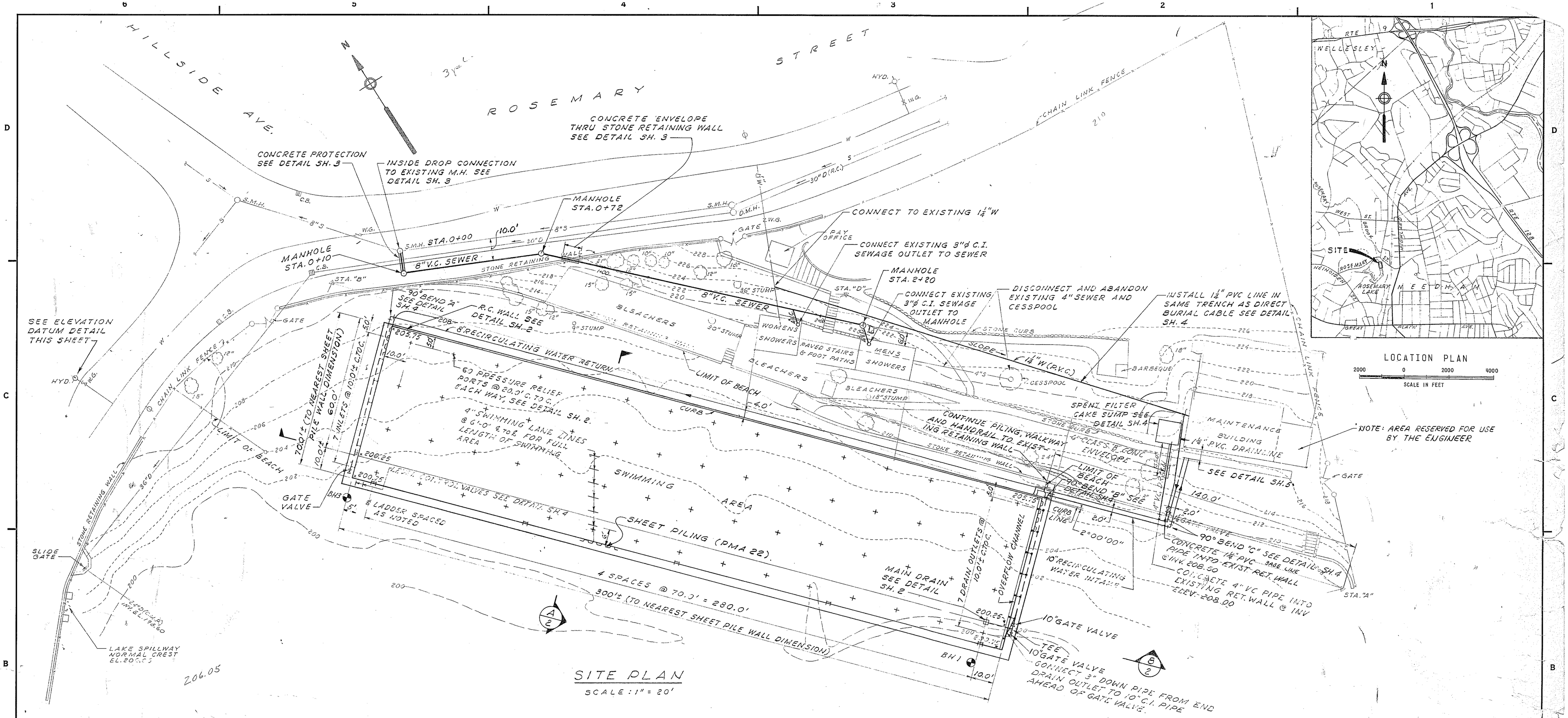

SITE PLAN

SCALE: 1" = 20'

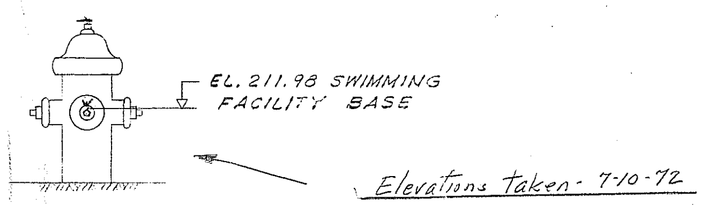

Elevations taken - 7-10-72

ELEVATION DATUM

NO SCALE

El notch in weir — 205.22
El. walkway at pool — 208.76
El. on Headwall — 208.33
El. top of plate — 206.55
El. water in lake — 205.32
El. water in pool — 205.70

LIST OF DRAWINGS

1. CIVIL - SITE PLAN AND GENERAL NOTES.
2. CIVIL - SWIMMING AREA SECTIONS AND DETAILS.
3. CIVIL - SEWER PROFILE AND DETAILS
4. CIVIL - WATER SERVICES AND MISCELLANEOUS DETAILS.
5. MECHANICAL AND ELECTRICAL - RECIRCULATION, FILTRATION, AND CHLORINATION EQUIPMENT.
6. ELECTRICAL - ELECTRICAL SERVICE PLAN, LINE DIAGRAM AND DETAILS

GENERAL NOTES

1 LEVELS ARE BASED ON THE HYDRANT ELEVATION 211.98 (SEE DETAIL THIS SHEET) THIS BASE IS 1.45' BELOW THE NEEDHAM SEWER BASE

2 LOGS OF BOREHOLES, SHOWN THUS :-⊕ ARE BOUND IN THE BACK OF THE SPECIFICATIONS

3 EXCAVATE AND DISPOSE OF THE EXISTING TOP 6-IN. OF MATERIAL FROM THE SWIMMING AREA PRIOR TO GRADING FOR CONSTRUCTION.

4 SOFT GROUND IN THE SWIMMING AREA SHALL BE EXCAVATED TO THE EXTENT AND THE DEPTH AS DIRECTED BY THE ENGINEER. SUCH EXCAVATION SHALL BE BACKFILLED WITH COMPACTED BANK-RUN GRAVEL AS SPECIFIED

5 EXCAVATE AND DISPOSE OF THE EXISTING TOP 2 FT.-0 IN. OF SAND FROM BEACH AREA ABOVE THE 205.00 CONTOUR AND REPLACE WITH IMPORTED BEACH SAND AS SPECIFIED.

6 THE LOCATIONS, SIZES AND ELEVATIONS OF EXISTING UTILITIES ARE BASED ON INFORMATION COMPILED FROM DRAWINGS OF RECORD.

7 THE APPROXIMATE LOCATIONS OF PROPOSED UTILITIES ARE INDICATED ON THE DRAWINGS. THE ACTUAL LOCATION OF EXISTING UTILITIES WILL GOVERN THE FINAL LOCATION OF THE PROPOSED UTILITIES.

8 EXCEPT WHERE OTHERWISE INDICATED A MINIMUM 6-IN CLEARANCE SHALL BE PROVIDED BETWEEN THE EXTERIORS OF EXISTING AND PROPOSED UTILITIES.

9 EXCEPT WHERE OTHERWISE INDICATED, RECIRCULATION WATER PIPE WORK SHALL BE CAST-IRON OR DUCTILE-IRON PIPE AND FITTINGS. EXCEPT WHERE OTHERWISE INDICATED, JOINTS IN ABOVE GROUND PIPE WORK SHALL BE FLANGED AND JOINTS IN BURIED OR SUBMERGED PIPE WORK SHALL BE MECHANICAL JOINT OR PUSH-ON JOINT AT THE CONTRACTORS OPTION.

10 FITTINGS MOUNTED DIRECTLY ON SHEET PILING SHALL BE LOCATED IN THE FIELD AT THE INDICATED DIMENSIONS AND THE LOCATIONS THEN ADJUSTED TO SUIT THE SHEET PILE PROFILE.

11 SEWER AND DRAIN PIPE SHALL BE VITRIFIED-CLAY PIPE WITH PREMOLDED COMPRESSION GASKET JOINTS.

12 WATER SUPPLY PIPE SHALL BE PVC (POLYVINYLCHLORIDE PIPE) WITH SOLVENT WELDED JOINTS

13 ALL CONCRETE SHALL BE CLASS A HAVING A MINIMUM COMPRESSIVE STRENGTH OF 3000 LBS. PER SQ. INCH AT THE END OF 28 DAYS EXCEPT WHERE OTHERWISE INDICATED.

14 ALL CONCRETE CONSTRUCTION AND REINFORCING BAR DETAILS SHALL CONFORM TO THE LATEST A.C.I. BUILDING CODE.

15 ALL REINFORCING SHALL BE GRADE 40, CONFORMING TO A.S.T.M. A615-68

16 EXPOSED CONCRETE EDGES SHALL HAVE A 3/4-IN. CHAMFER

17 SEE M&E FIELD BOOK 1452 FOR LOCATIONS OF SURVEY STATIONS A,B,C, AND D

NUMBER	DATE	MADE BY	CHECKED BY	DESCRIPTION

REVISIONS

DRAWN BY J.R. Greene

DEPT. CHECK G. Wolfrey

PROJ. CHECK

METCALF & EDDY, INC. | ENGINEERS
BOSTON • NEW YORK • PALO ALTO

REG. PROF. ENGR. MASS. NO. 19130 — 31 August 71 DATE

REG. PROF. ENGR. MASS. NO. 2816 — 7 Sept 71 DATE

SCALE: 1" = 20'-0"

UNLESS OTHERWISE NOTED OR CHANGED BY REPRODUCTION

TOWN OF NEEDHAM PARK AND RECREATION COMMISSION

ROSEMARY LAKE INTERIM SWIMMING FACILITY

SITE PLAN AND GENERAL NOTES

CIVIL

JOB 1377

FILE NO. H-54405-1

SHEET 1 OF 6

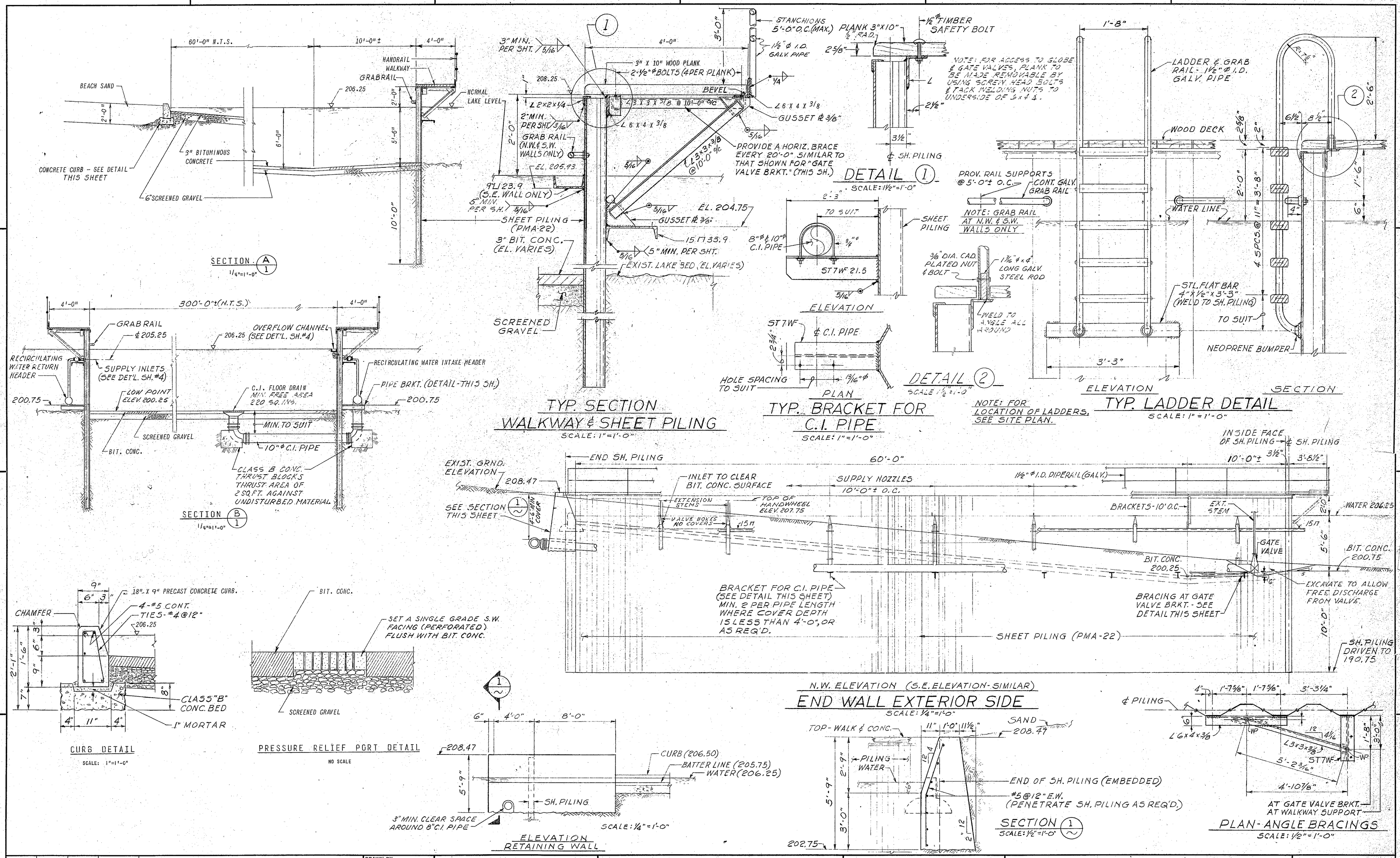

NUMBER	DATE	MADE BY	CHECKED BY	DESCRIPTION

REVISIONS

DRAWN BY J. J. Shannon

DEPT. CHECK H. K. McGee

PROJ. CHECK

D. S. Graff

R. Yanofsky

COMMONWEALTH OF MASSACHUSETTS — CHARLES Y. HITCHCOCK, JR. No. 2816 — REGISTERED PROFESSIONAL ENGINEER

M&E METCALF & EDDY, INC. | ENGINEERS
BOSTON • NEW YORK • PALO ALTO • CINCINNATI

REG. PROF. ENGR. MASS. NO. 19130 — DATE 31 Aug 71

REG. PROF. ENGR. MASS. NO. 2816 — DATE 7 Sept 71

SCALE: AS SHOWN

UNLESS OTHERWISE NOTED OR CHANGED BY REPRODUCTION

TOWN OF NEEDHAM PARK AND RECREATION COMMISSION

ROSEMARY LAKE INTERIM SWIMMING FACILITY

SWIMMING AREA SECTIONS AND DETAILS

CIVIL

JOB 1377

FILE NO. H-54406-1

SHEET 2 OF 6

K&E PHOENIX ® TRACING CLOTH B.L.M. INC. 7420 60061

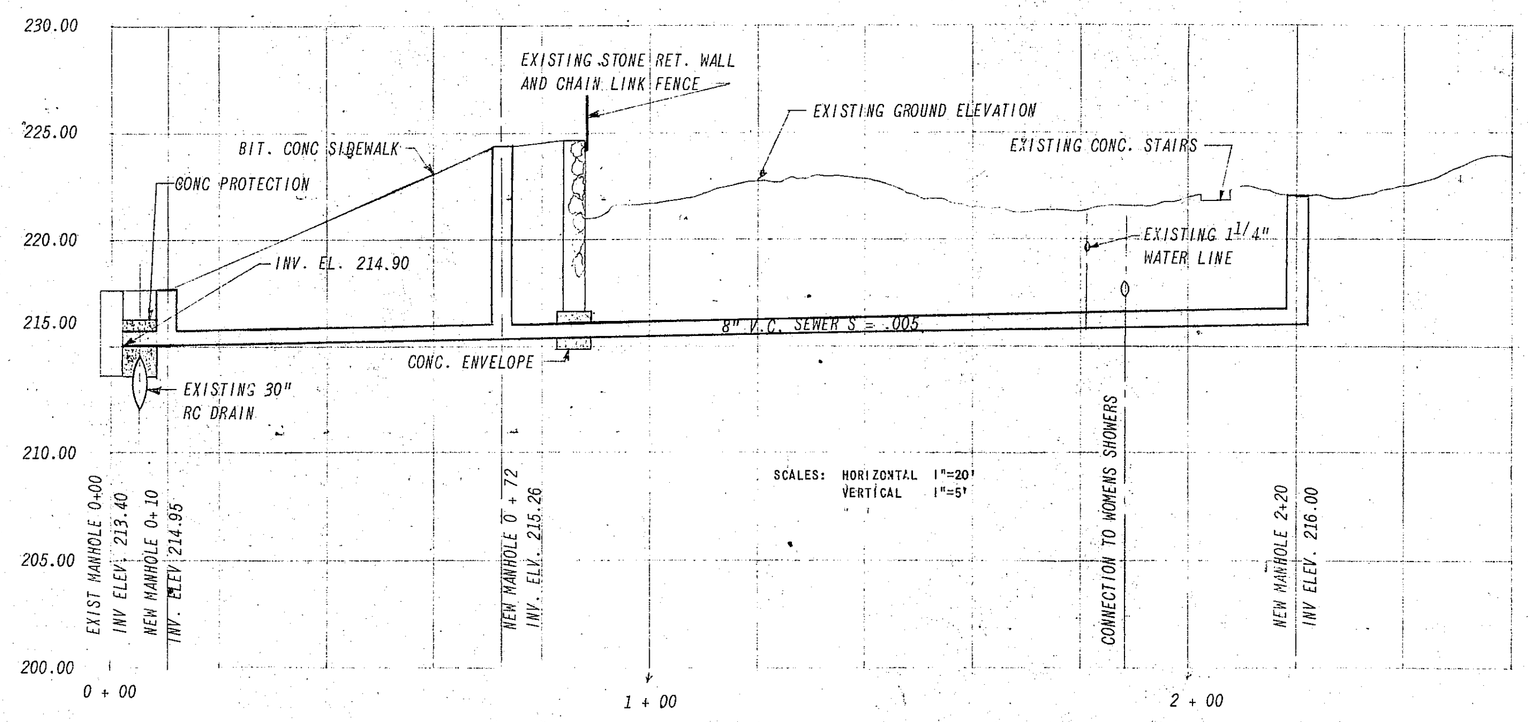

8" V.C. SEWER PROFILE

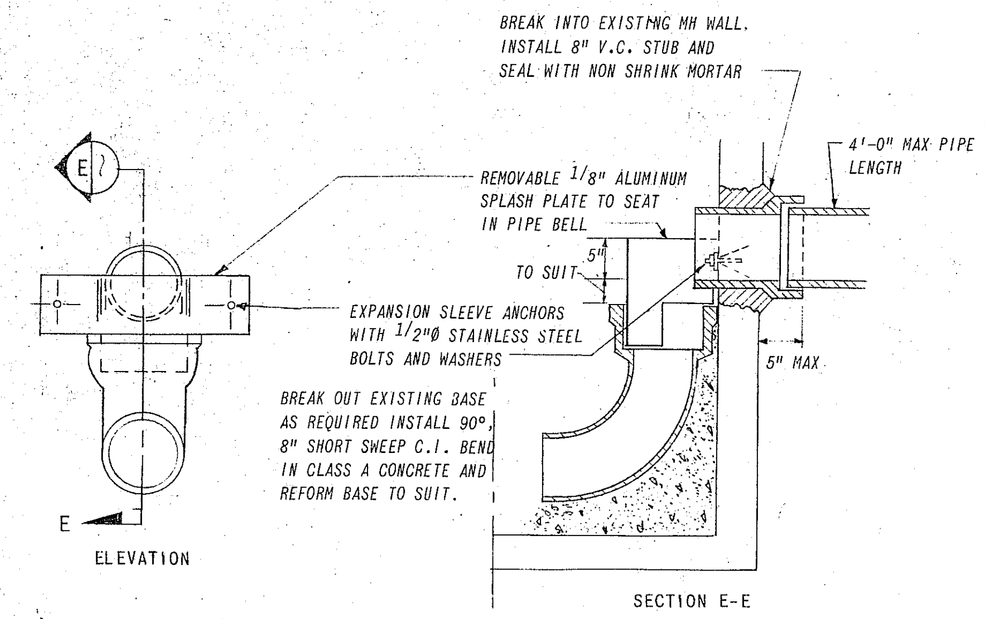

DROP CONNECTION AT M.H 0+00

NO SCALE

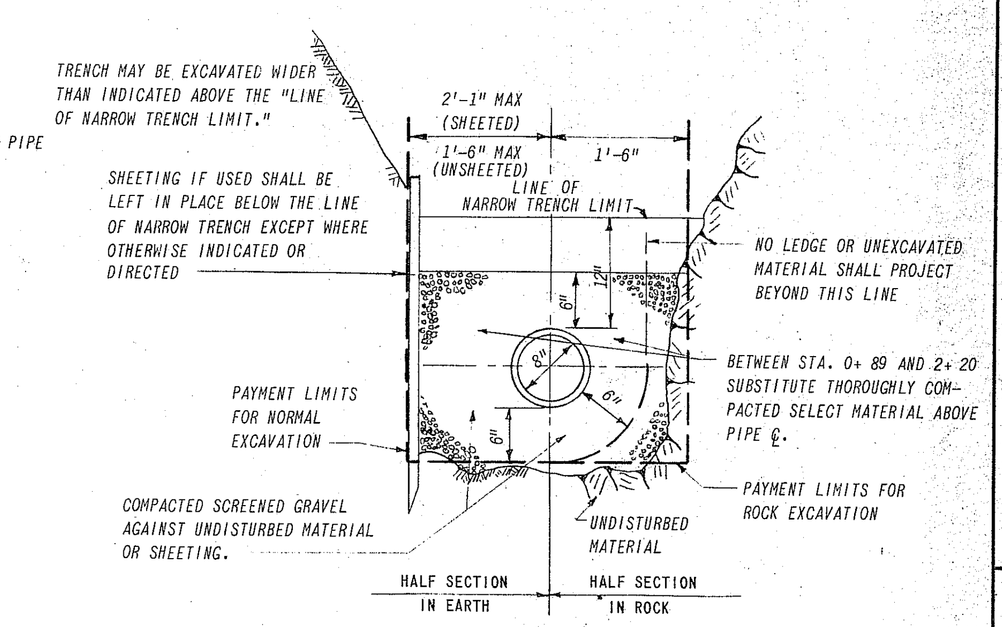

SEWER TRENCH SECTIONS

NO SCALE

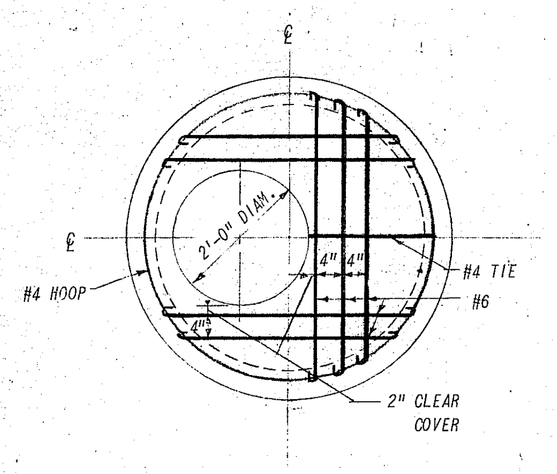

ROOF PLAN

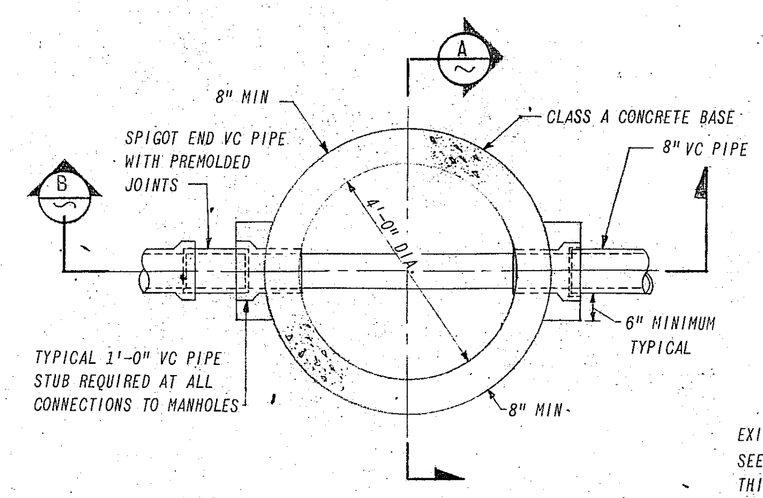

BASE PLAN

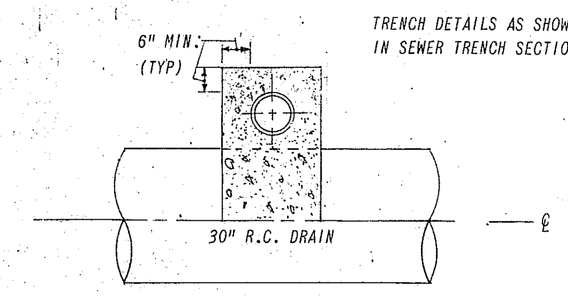

SECTION D - D

1/2" = 1'- 0"

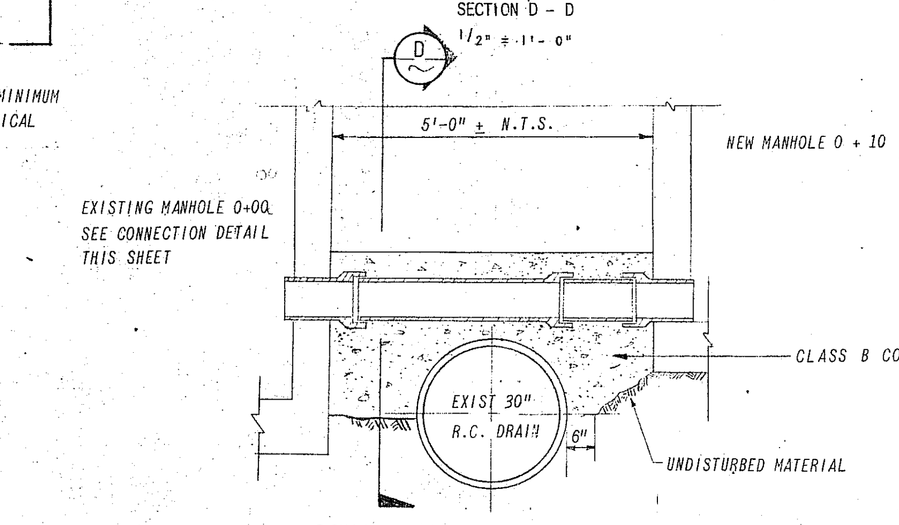

CONCRETE PROTECTION DETAIL

1/2" = 1'- 0"

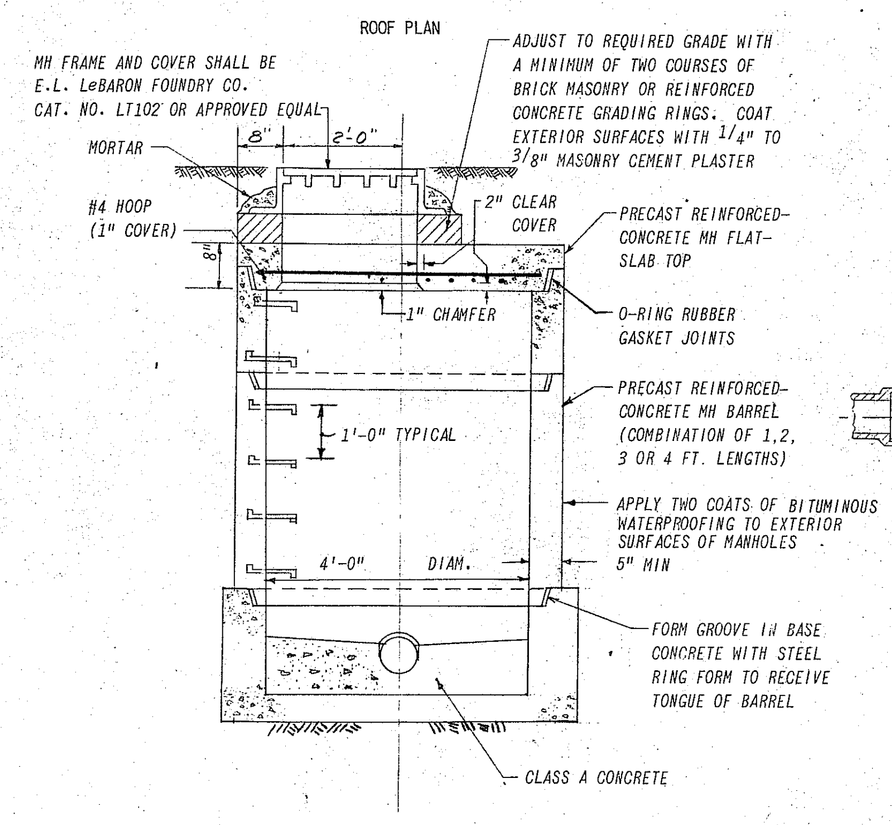

SECTION A-A

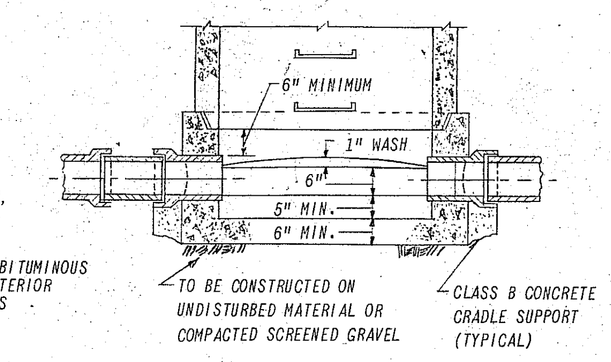

SECTION B-B

MANHOLE DETAILS

NO SCALE

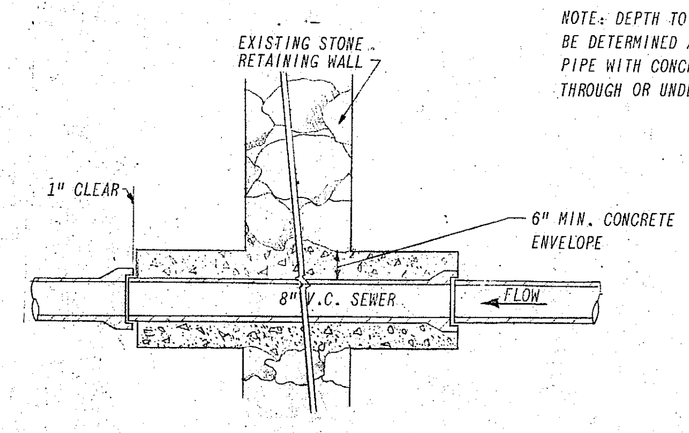

SECTION C-C

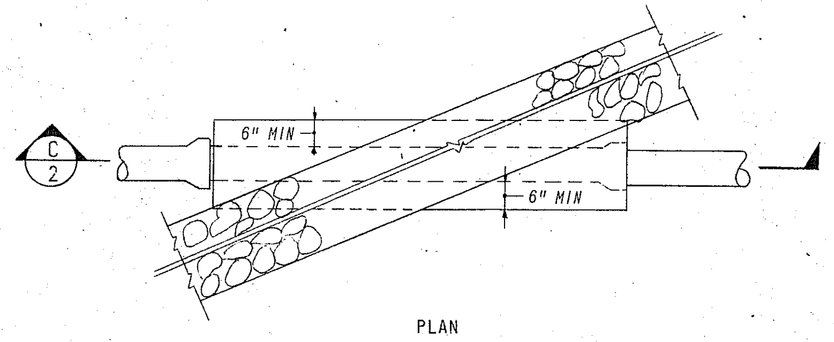

PLAN

CONCRETE ENVELOPE THROUGH RET. WALL

1/2"=1'-0"

NUMBER	DATE	MADE BY	CHECKED BY	DESCRIPTION

REVISIONS

DRAWN BY O.F. Jones

DEPT. CHECK

PROJ. CHECK

COMMONWEALTH OF MASSACHUSETTS — CHARLES Y. HITCHCOCK, JR. No. 2816 — REGISTERED PROFESSIONAL ENGINEER

METCALF & EDDY, INC. | ENGINEERS
BOSTON • NEW YORK • PALO ALTO • CINCINNATI

REG. PROF. ENGR. MASS. NO. 19130 — DATE 31 Aug 71

REG. PROF. ENGR. MASS. NO. 2816 — DATE 7 Sep 71

SCALE: AS SHOWN

UNLESS OTHERWISE NOTED OR CHANGED BY REPRODUCTION

TOWN OF NEEDHAM PARK AND RECREATION COMMISSION
ROSEMARY LAKE INTERIM SWIMMING FACILITY

SEWER PROFILE AND DETAILS

CIVIL

JOB 1377

FILE NO. H-54407-1

SHEET 3 OF 6

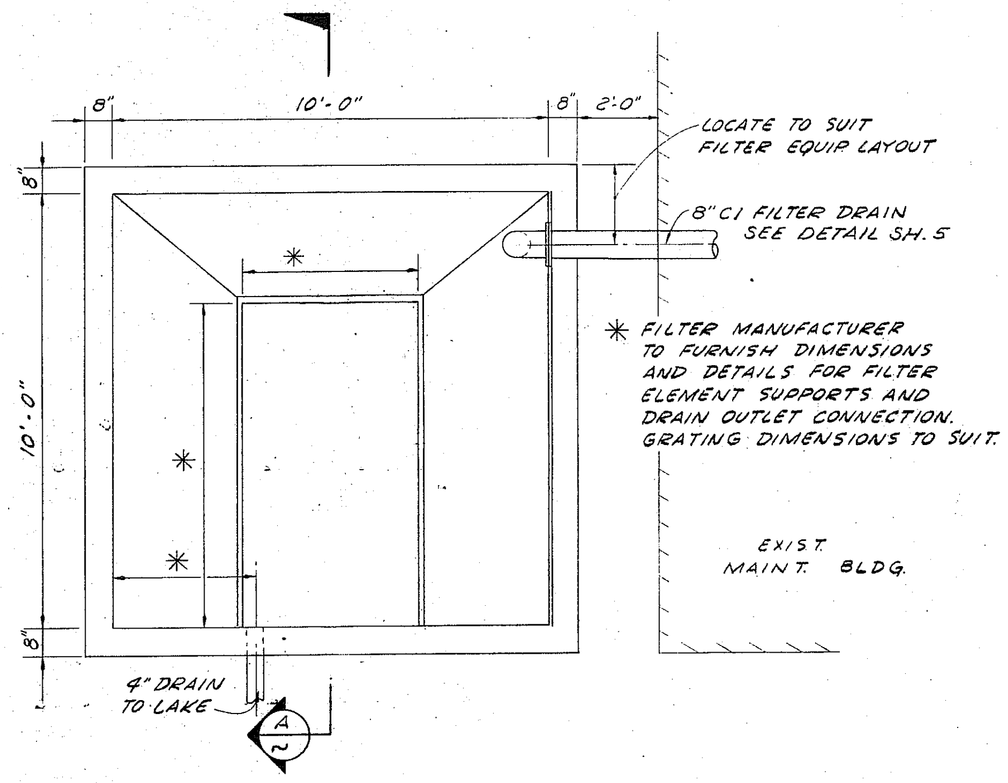

PLAN

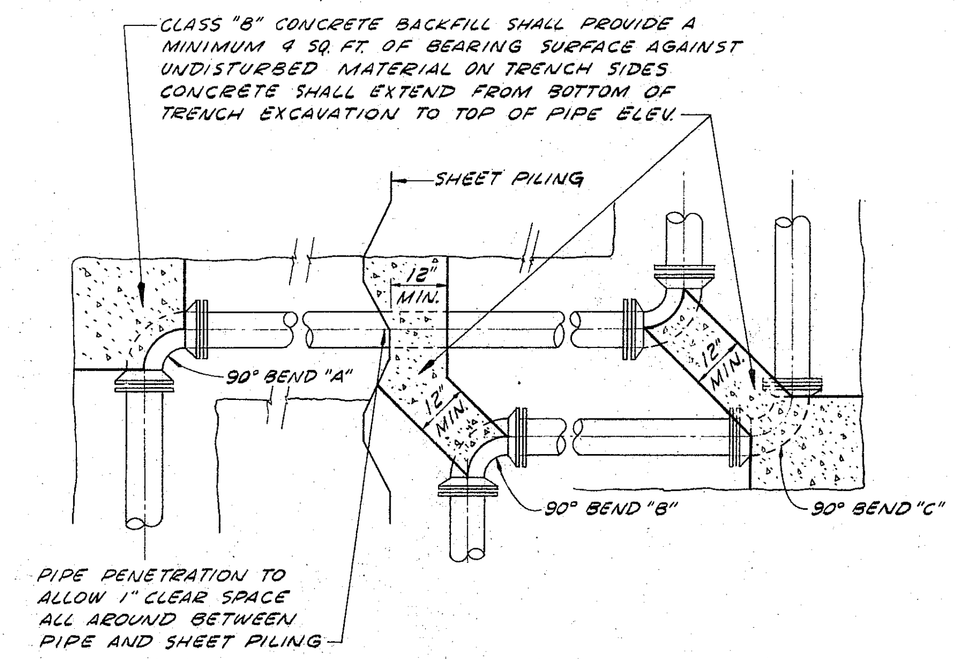

THRUST BLOCK DETAILS

SCALE: 1/2" = 1'-0"

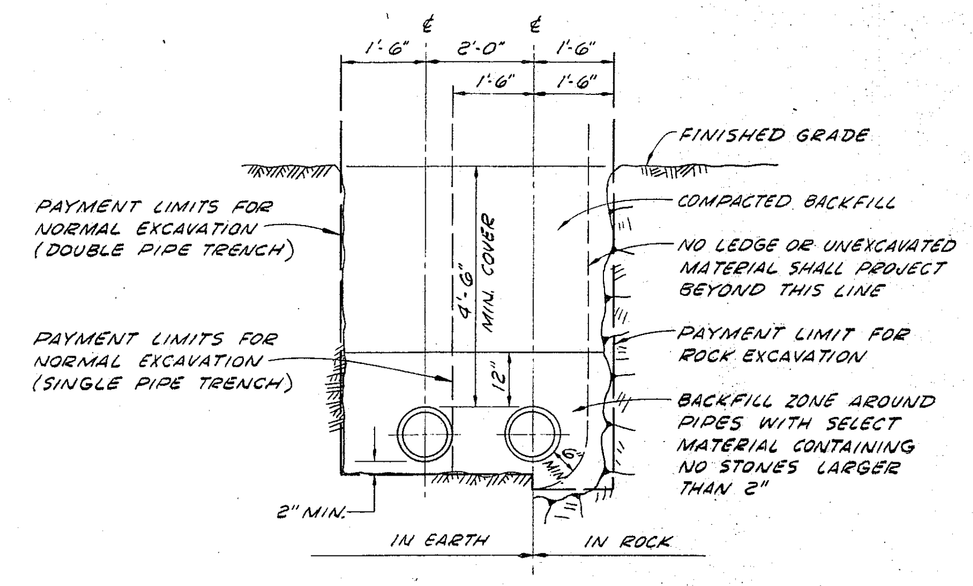

RECIRCULATION PIPING TRENCH SECTIONS

SCALE: 1/2" = 1'-0"

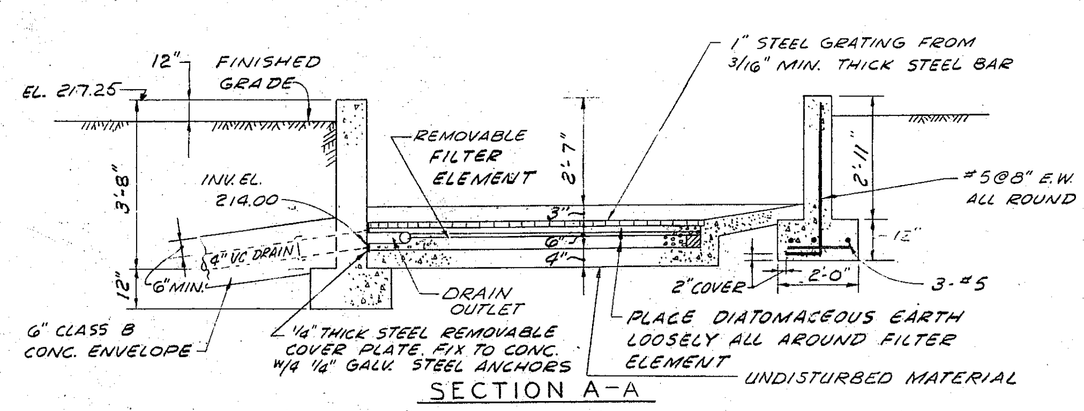

SECTION A-A

SPENT FILTER CAKE SUMP DETAILS

NO SCALE

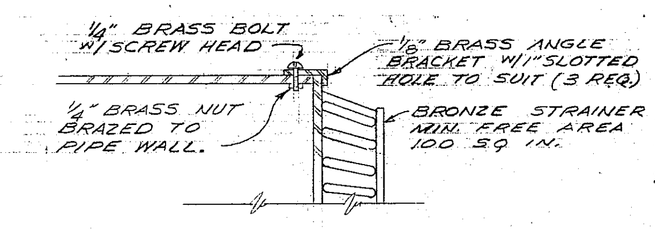

DETAIL "A"

NO SCALE

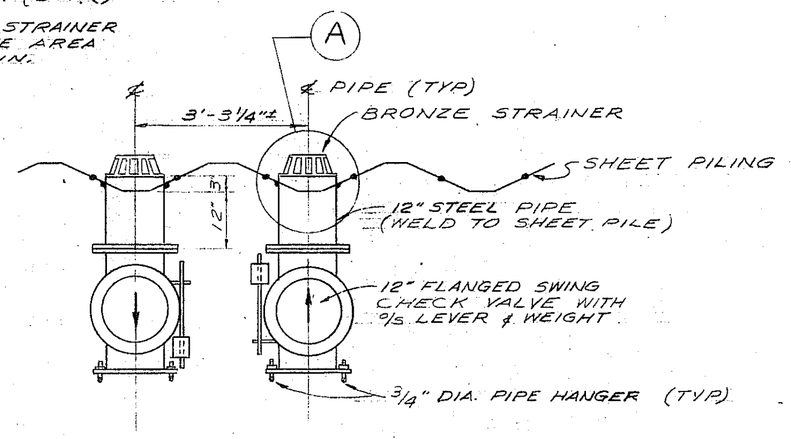

PLAN

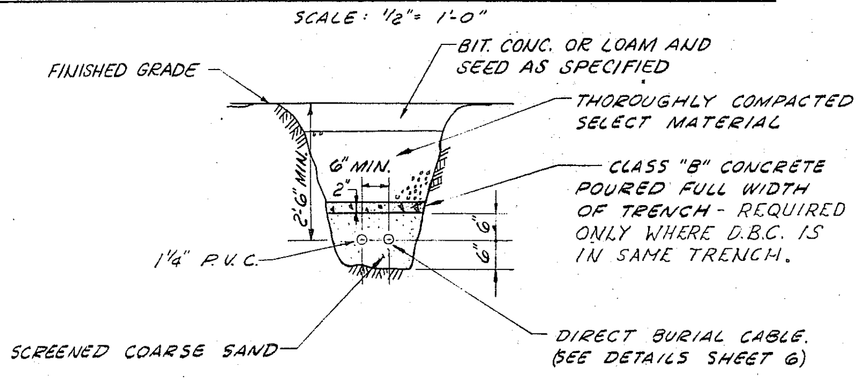

P.V.C. PIPE TRENCH DETAIL

NO SCALE

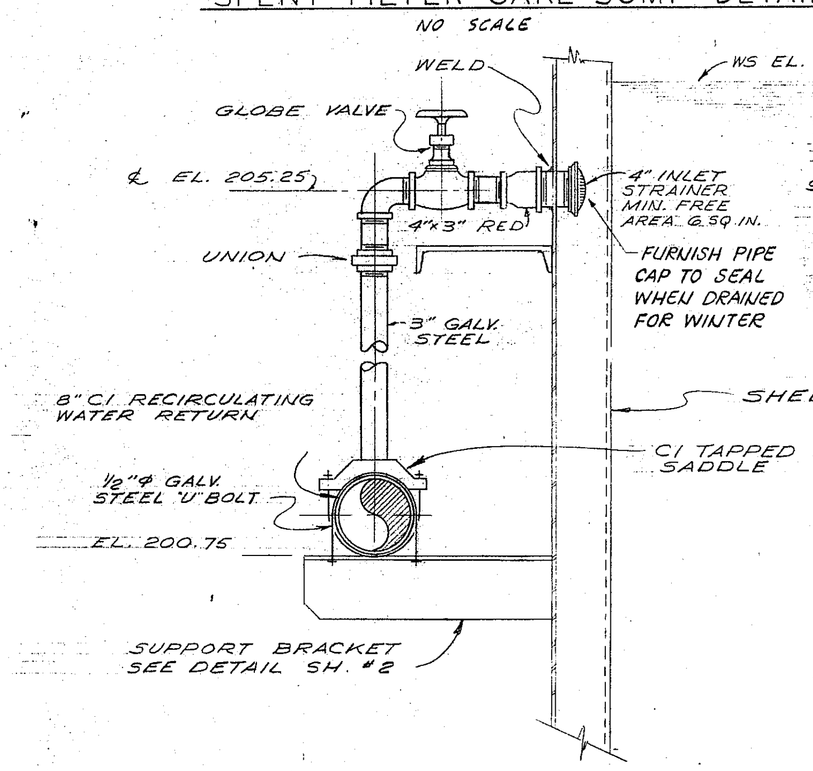

RECIRCULATING WATER INLET DETAIL

SCALE: 1" = 1'-0"

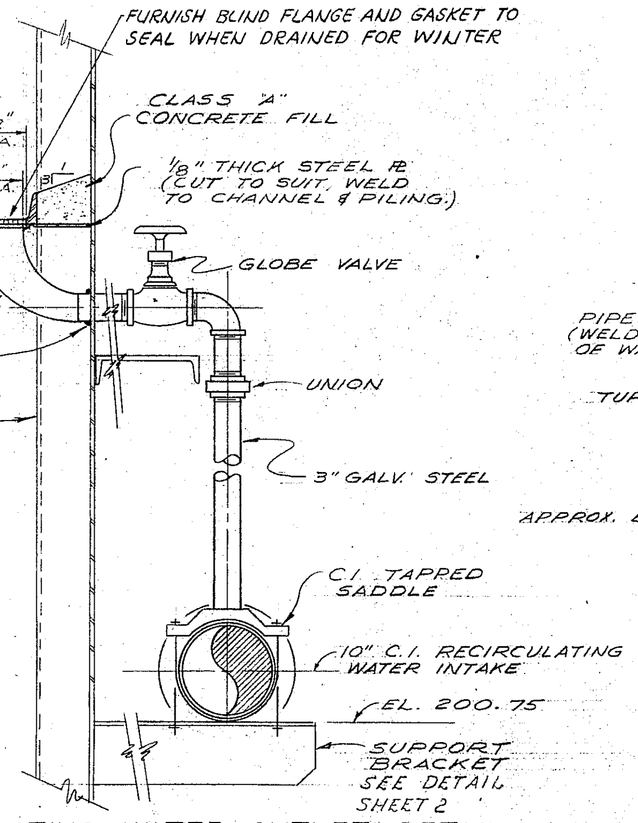

RECIRCULATING WATER OUTLET DETAIL

SCALE: 1" = 1'-0"

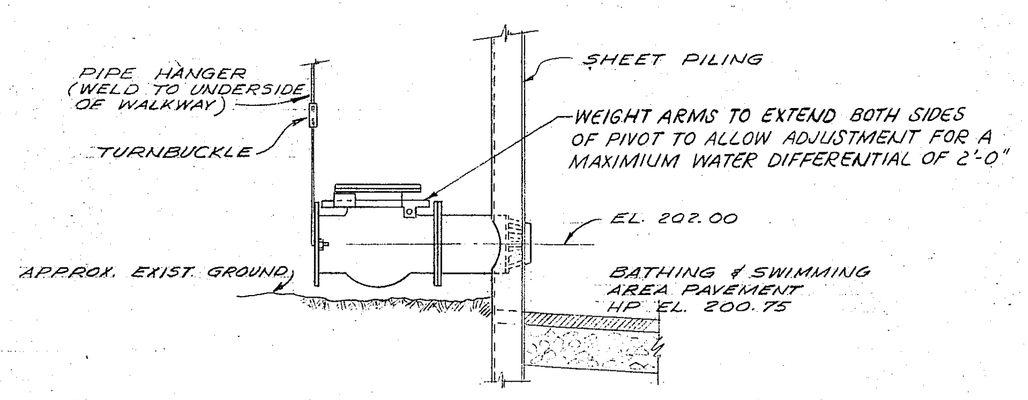

ELEVATION

LEVEL CONTROL VALVE DETAIL

SCALE: 1/2" = 1'-0"

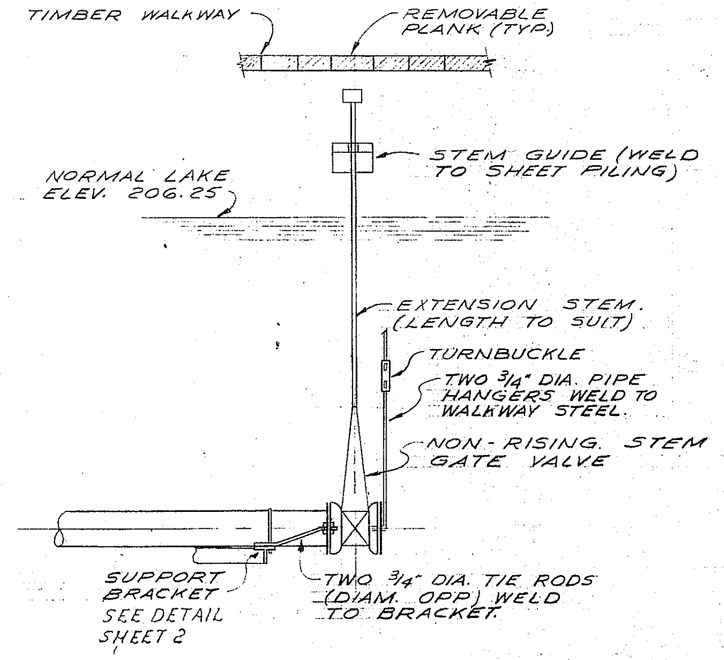

SUBMERGED GATE VALVE DETAIL

SCALE: 1/2" = 1'-0

NUMBER	DATE	MADE BY	CHECKED BY	DESCRIPTION

REVISIONS

DRAWN BY: A. Hayden

DEPT. CHECK: W.H. Brown

PROJ. CHECK: Jason C. Ferris

COMMONWEALTH OF MASSACHUSETTS — CHARLES V. HITCHCOCK, JR. No. 2816 — REGISTERED PROFESSIONAL ENGINEER

M&E METCALF & EDDY, INC. | ENGINEERS
BOSTON • NEW YORK • PALO ALTO • CINCINNATI

REG. PROF. ENGR. MASS. NO. 19130 — DATE 31 Aug 71

REG. PROF. ENGR. MASS. NO. 2816 — DATE 7 Sept 71

SCALE: AS SHOWN

UNLESS OTHERWISE NOTED OR CHANGED BY REPRODUCTION

TOWN OF NEEDHAM PARK AND RECREATION COMMISSION

ROSEMARY LAKE INTERIM SWIMMING FACILITY

WATER SERVICES AND MISCELLANEOUS DETAILS

CIVIL

JOB 1377

FILE NO. H-54408-1

SHEET 4 OF 6

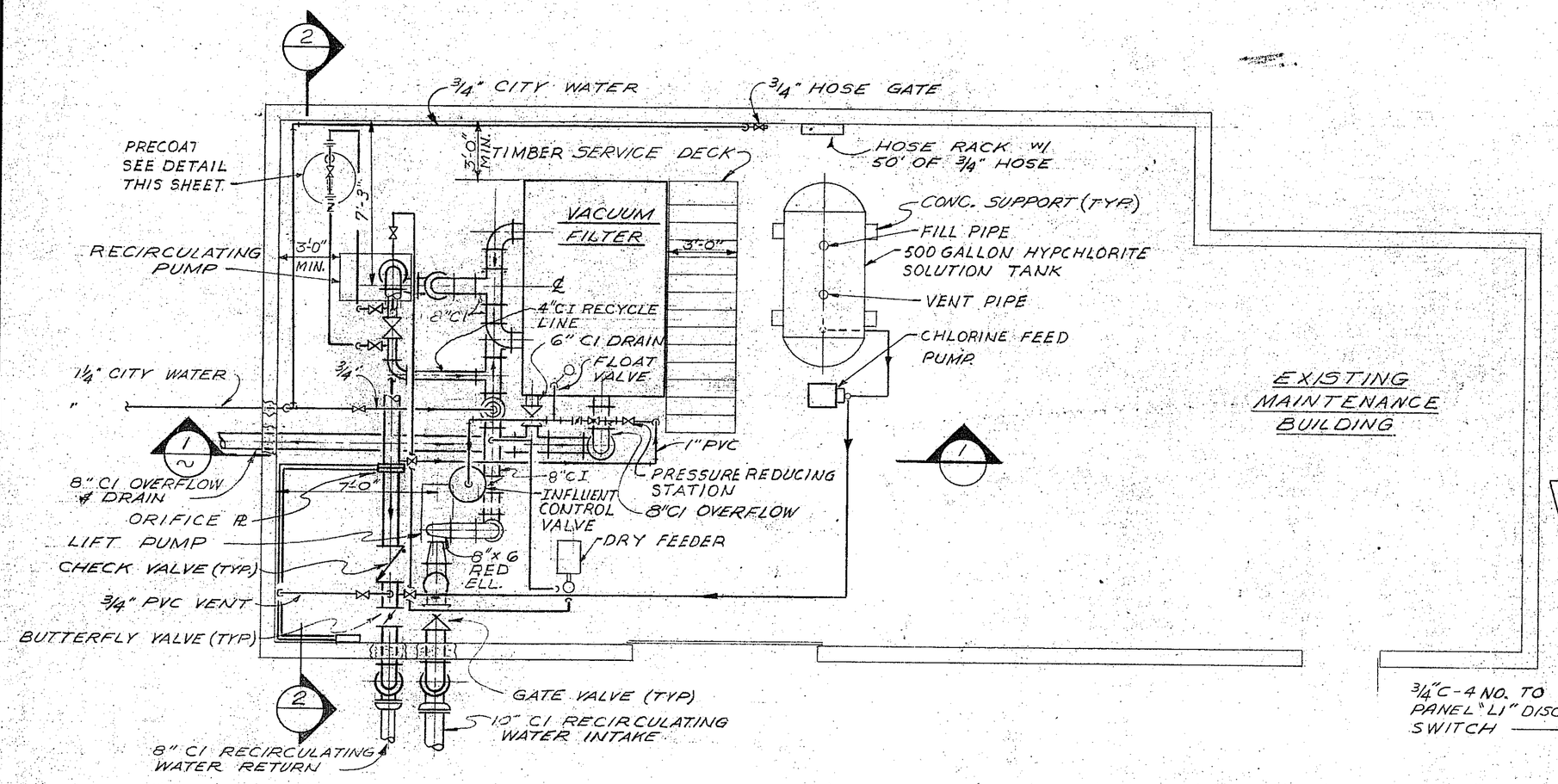

FLOOR PLAN
SCALE: 1/4"=1'-0"

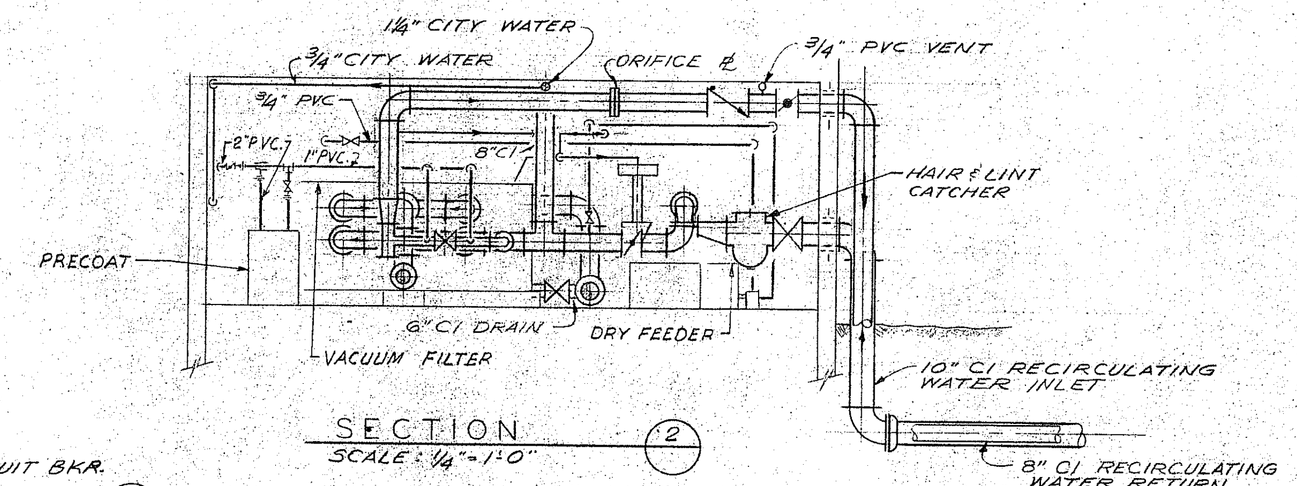

SECTION 2
SCALE: 1/4"=1'-0"

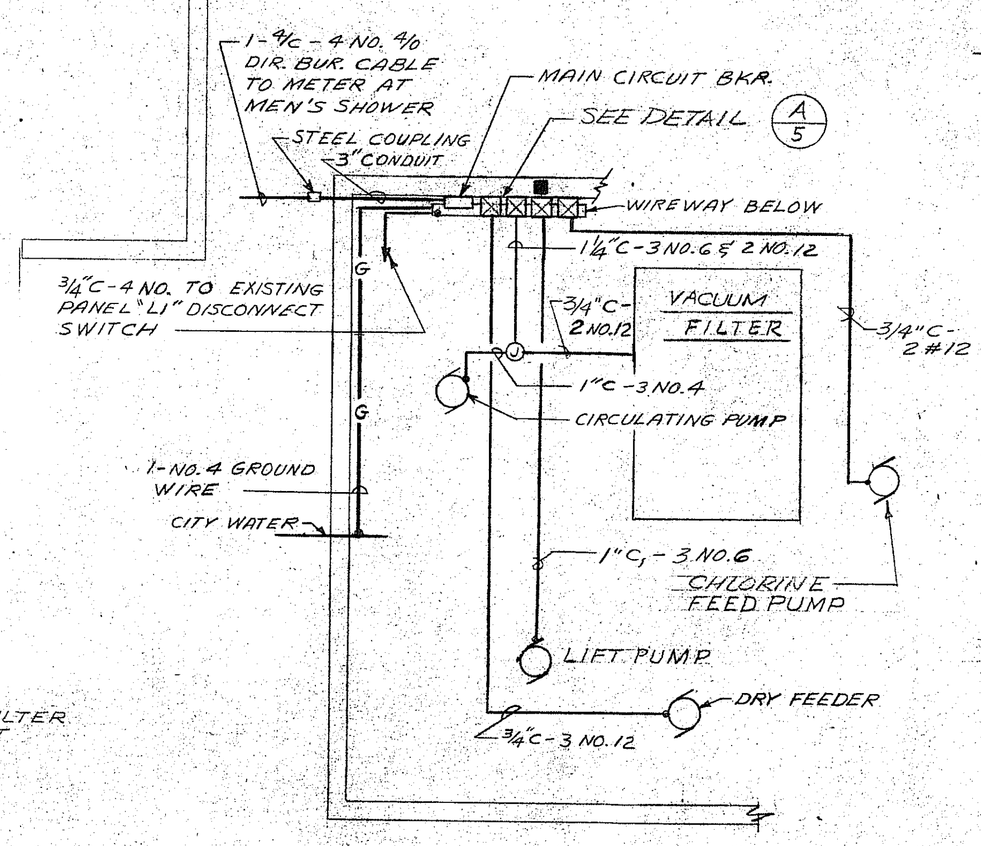

MAINTENANCE BLDG
PART PLAN, ELECT.
SCALE-1/4"=1'-0"

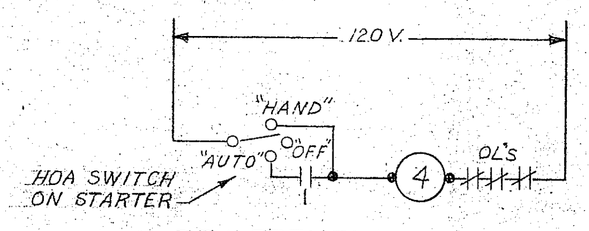

DRY FEEDER CONTROL DIAGRAM

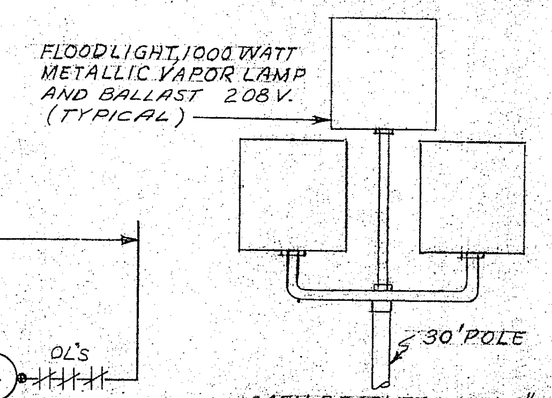

FLOODLIGHT BRACKET DETAIL
NO SCALE

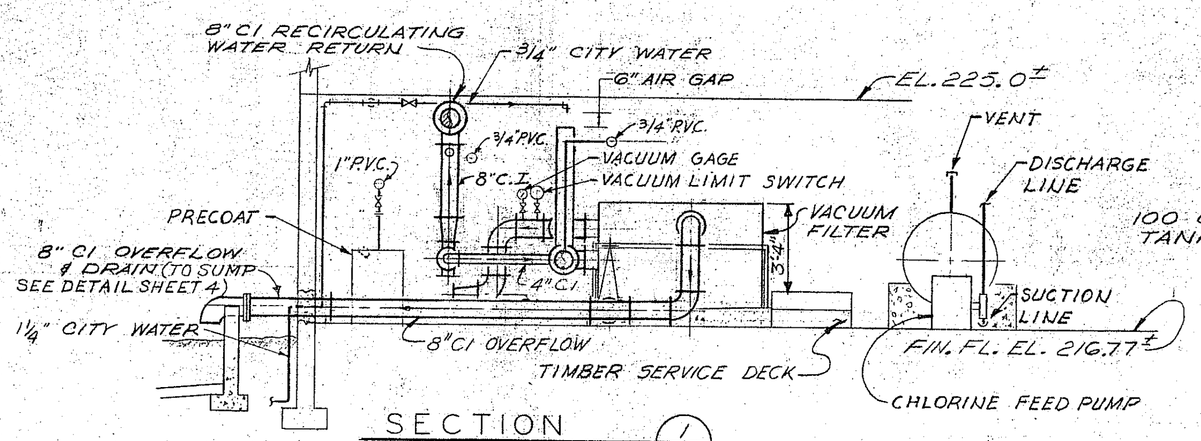

SECTION 1
SCALE: 1/4"=1'-0"

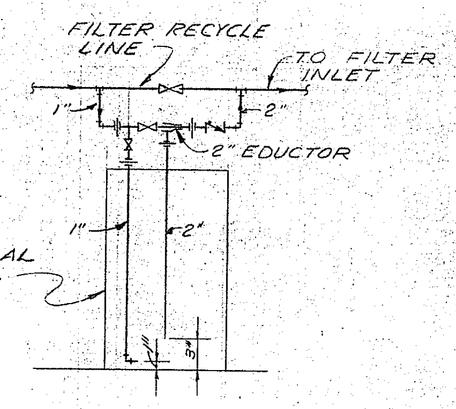

PRECOAT DETAIL
NO. SCALE

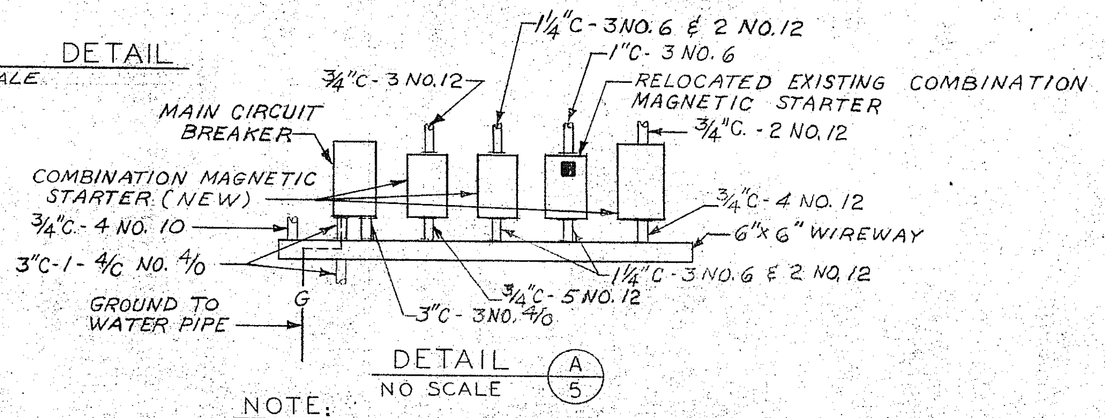

DETAIL A/5
NO SCALE

NOTE:
FOR SINGLE LINE DIAGRAM SEE SHEET 6

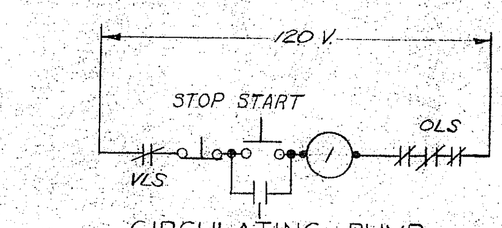

CIRCULATING PUMP

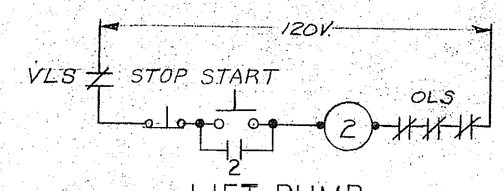

LIFT PUMP

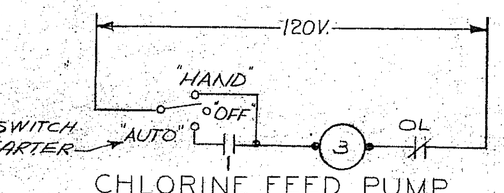

CHLORINE FEED PUMP CONTROL DIAGRAM

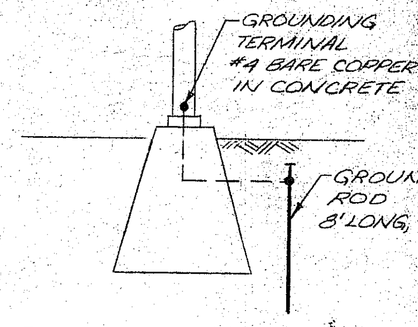

POLE GROUNDING DETAIL
NO SCALE

SYMBOLS

- CONDUIT RUNS EXPOSED
- COMBINATION MAGNETIC MOTOR STARTER
- MOTOR, FOR HORSE POWER RATING SEE SINGLE LINE DIAGRAM
- RELOCATED EXISTING EQUIPMENT
- VLS VACUUM LIMIT SWITCH

NUMBER	DATE	MADE BY	CHECKED BY	DESCRIPTION

REVISIONS

DRAWN BY
DEPT. CHECK
PROJ. CHECK

COMMONWEALTH OF MASSACHUSETTS — CHARLES Y. HITCHCOCK, JR. No. 2816 — REGISTERED PROFESSIONAL ENGINEER

M&E METCALF & EDDY, INC. | ENGINEERS
BOSTON • NEW YORK • PALO ALTO • CINCINNATI

REG. PROF. ENGR. MASS. NO. 19130 — DATE 31 Aug 71
REG. PROF. ENGR. MASS. NO. 2816 — DATE 7 Sept 71

SCALE: AS SHOWN

UNLESS OTHERWISE NOTED OR CHANGED BY REPRODUCTION

TOWN OF NEEDHAM PARK AND RECREATION COMMISSION
ROSEMARY LAKE INTERIM SWIMMING FACILITY
RECIRULATION, FILTRATION AND CHLORINATION EQUIPMENT
MECHANICAL & ELECTRICAL

JOB 1377
FILE NO. H-54409-1
SHEET 5 OF 6

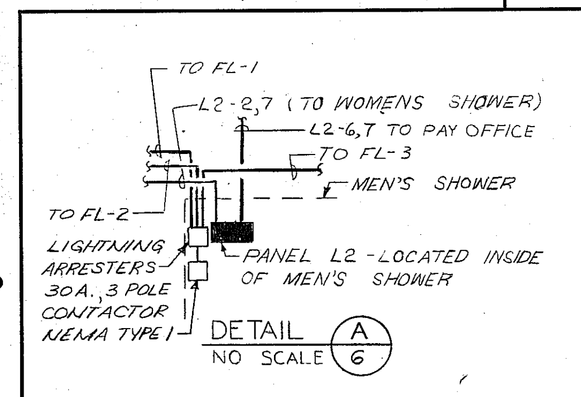

DETAIL A/6
NO SCALE

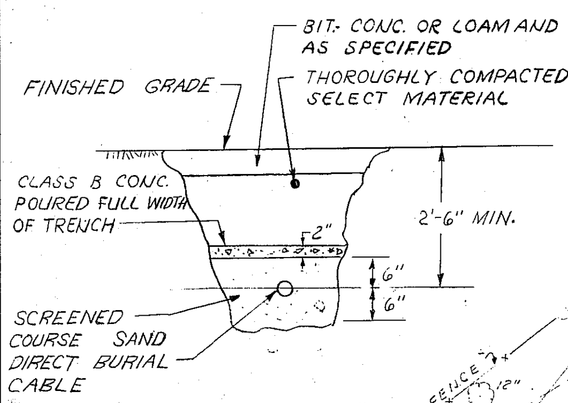

DIRECT BURIAL CABLE
DETAIL - TYPICAL

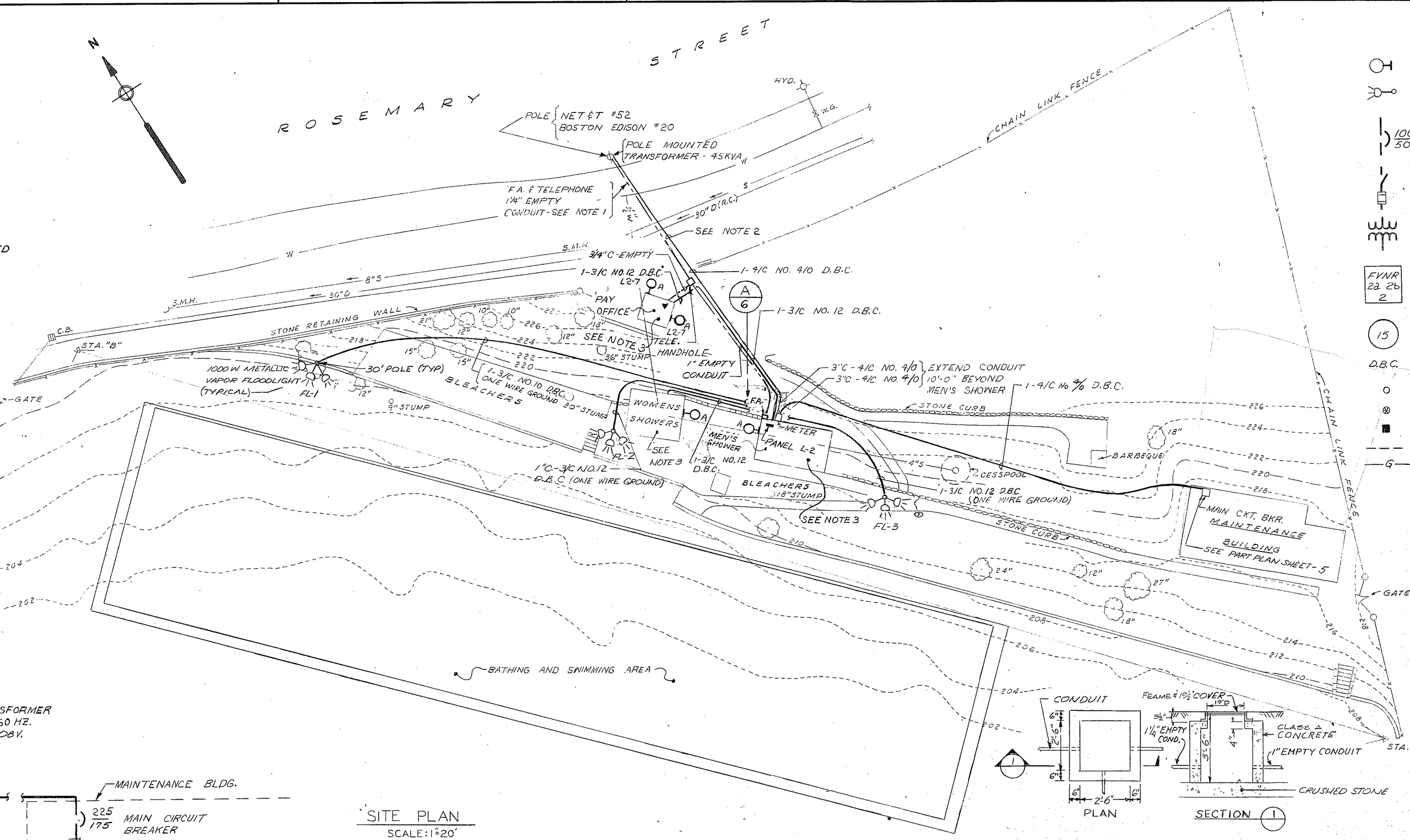

SITE PLAN
SCALE: 1"=20'

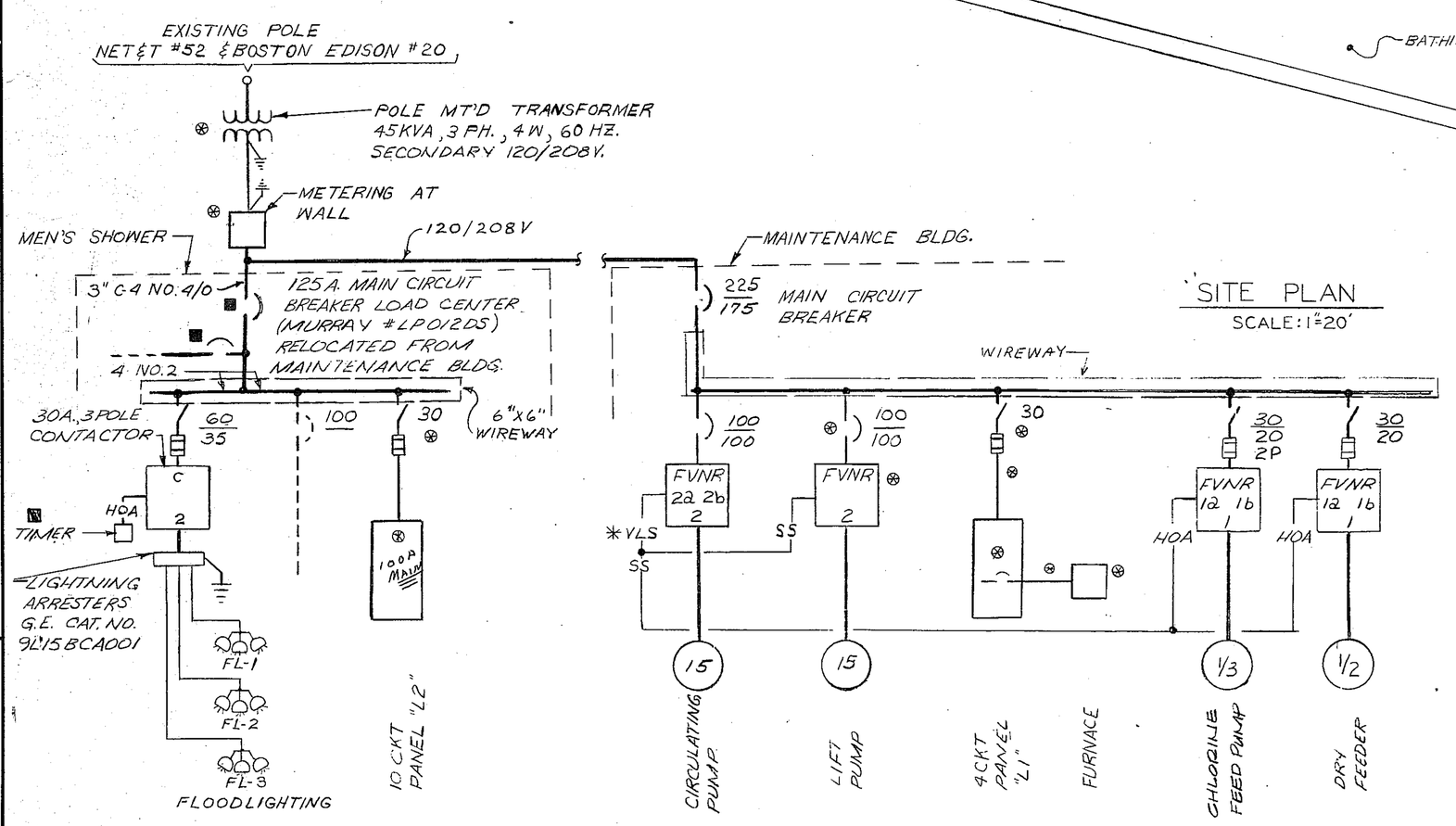

SINGLE LINE DIAGRAM
*VACUUM LIMIT SWITCH

LOCATED IN MEN'S SHOWER

PANEL L2 (EXISTING)
SERVICE - 120/208 V, 3 PH., 4W, 60 HZ.
MAIN - LUGS ONLY
BRANCHES - CIRCUIT BREAKERS
CABINET - SURFACE MOUNTED

PANEL SCHEDULE

CIR. NO.	EQUIPMENT DESIGNATION	H.P.	K.V.A.	BRANCH CIRCUITS FRAME AMPS	TRIP AMPS	POLES
1	LTG. & RECEPT. IN MEN'S SHOWER		0.75	100	15	1
2	LTG. & RECEPT. IN WOMEN'S SHOWER		0.55			
3	SPARE		1.0			
4			1.0			
5			1.0			
6	LTG. & RECEPT. PAY OFFICE		0.45			
7	LTG. OUTDOOR AT BUILDINGS		0.6			
8	SPARE		1.0			
9			1.0			
10			1.0			

HANDHOLE DETAIL
NO SCALE

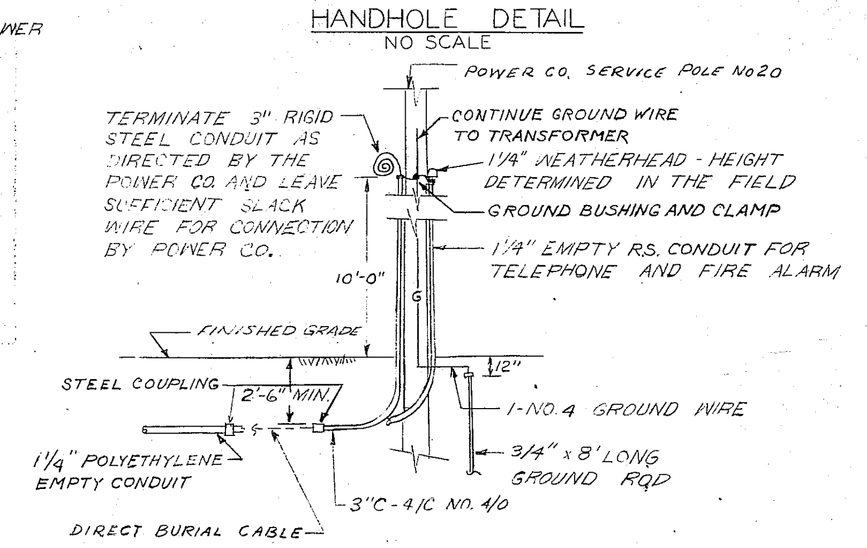

SERVICE POLE DETAIL
NO SCALE

SYMBOLS

- WALL MOUNTED INCANDESCENT LIGHTING FIXTURE
- FLOODLIGHTS ON POLE
- 100/50 — MOLDED CASE AND CIRCUIT BREAKER, THERMAL MAGNETIC TRIP, 3 POLE. UPPER NUMERAL INDICATES FRAME SIZE. LOWER NUMERAL INDICATES TRIP SETTING.
- FUSED DISCONNECT SWITCH, 3 POLE
- TRANSFORMER, SIZE AS NOTED ON DRAWING
- FVNR 2a 2b 2 — MAGNETIC STARTER, FVNR-FULL VOLTAGE NON-REVERSING, 2a, 2b-AUXILIARY CONTACTS a-NORMALLY OPEN, b-NORMALLY CLOSED 2-INDICATED NEMA SIZE
- 15 — SQUIRREL CAGE INDUCTION MOTOR NUMERAL DENOTES HORSE POWER
- D.B.C. — DIRECT BURIAL CABLE
- POLE
- EXISTING EQUIPMENT
- RELOCATED EQUIPMENT
- FUTURE
- G — BARE COPPER GROUND WIRE-~~STRANDED~~ SOLID

NOTES:

1. PROVIDE 1 No. 10 GALVANIZED IRON B.W.G. PULLING-IN WIRE IN ALL TELEPHONE AND FIRE ALARM CONDUITS.
2. WHERE DIRECT BURIAL CABLE CROSSING THE STREET, CABLE SHALL BE IN 3" RIGID STEEL CONDUIT.
3. a. INSTALL 2 LIGHTING FIXTURES, 1 SWITCH AND 1 RECEPTACLE IN WOMEN'S SHOWER BUILDING. LOCATION AS DIRECTED IN THE FIELD.
   b. INSTALL 3 LIGHTING FIXTURES, 2 RECEPTACLES AND 1 SWITCH IN MEN'S SHOWER BUILDING. LOCATION AS DIRECTED IN THE FIELD.
   c. INSTALL 1 LIGHTING FIXTURE, 1 RECEPTACLE AND 1 SWITCH IN PAY OFFICE. LOCATION AS DIRECTED IN THE FIELD.
4. PROVIDE ONE OUTDOOR LIGHT AT MENS AND WOMENS SHOWER BUILDING AND 2 OUTDOOR LIGHTS AT PAY OFFICE AS SHOWN ON THE DRAWING.
5. ALL ELECTRICAL EQUIPMENT IS NEW EXCEPT THAT MARKED EXISTING OR RELOCATED.
6. ALL ELECTRICAL EQUIPMENT THAT IS REMOVED AND NOT REUSED FOR NEW INSTALLATIONS SHALL BE RETURNED TO THE OWNER.
7. OUTDOOR LIGHTING FIXTURE TYPE A SHALL BE 100 WATT, 120 VOLT, WALL MOUNTED, VAPORTIGHT.
8. CONDUIT AND CABLE RUNS ARE SHOWN DIAGRAMMATICALLY AND SHALL BE INSTALLED IN A MANNER TO PREVENT CONFLICT WITH EQUIPMENT AND STRUCTURAL CONDITIONS.
9. ALL CONDUIT, CABLE AND EQUIPMENT SHALL BE INSTALLED AND GROUNDED IN ACCORDANCE WITH THE LATEST RULES AND REGULATIONS OF THE NATIONAL ELECTRICAL CODE.
10. HANDHOLE FRAME AND COVER SHALL BE MECHANICS FOUNDRY CO. CAT. NO. A-2030 OR APPROVED EQUAL.

NUMBER	DATE	MADE BY	CHECKED BY	DESCRIPTION

REVISIONS R. Yanofsky

DRAWN BY D. Berry
DEPT. CHECK A. LaPorte, A. McBetnight
PROJ. CHECK

COMMONWEALTH OF MASSACHUSETTS — CHARLES V. HITCHCOCK, JR. — NO. 2816

M&E METCALF & EDDY, INC. | ENGINEERS
BOSTON • NEW YORK • PALO ALTO

REG. PROF. ENGR. MASS. NO. 19130 — 31 Aug 71 DATE
REG. PROF. ENGR. MASS. NO. 2816 — 7 Sept 71 DATE

SCALE: AS SHWON
UNLESS OTHERWISE NOTED OR CHANGED BY REPRODUCTION

TOWN OF NEDHAM PARK AND RECREATION COMMISSION
ROSEMARY LAKE INTERIM SWIMMING FACILITY
ELECTRICAL SERVICE PLAN, LINE DIAGRAM AND DETAILS
ELECTRICAL

JOB 1377
FILE NO. H-54410-1
SHEET 6 OF 6

P62
A-2

BORING REPORT C. L. GUILD DRILLING & BORING CO., INC.

AREA CODE 617 848-2777

BRAINTREE, MASS.

TO: METCALF & EDDY, ENGINEERS DATE: 27 MAY 1971

ADDRESS: STATLER OFFICE BUILDING BOSTON, MASSACHUSETTS

SITE LOCATION: PROPOSED WALL ------ ROSEMARY LAKE ----- NEEDHAM, MASSACHUSETTS

REPORT SENT TO: ABOVE - ATTN - MR. SHERMAN DATE: 27 MAY 1971

SAMPLES SENT TO: ABOVE - ATTN - MR. SHERMAN DATE: 27 MAY 1971

BORING LOCATION DRAWING TO BE FURNISHED

BY

OTHERS

JOB NO B-5194

1'62
1-2

BORING REPORT

C. L. GUILD DRILLING & BORING CO., INC.

BRAINTREE, MASS.

BORING REPORT

TO METCALF & EDDY, ENGINEERS BOSTON, MASSACHUSETTS

SITE LOCATION PROPOSED WALL ---------- ROSEMARY LAKE --- NEEDHAM, MASSACHUSETTS

SCALE 1" = 8 FT. REFERENCE DATUM TO BE FURNISHED BY OTHERS

BORING NO. 1

WATER	GROUND SURFACE		
0.0'	SAND, GRAVEL & SILT - ODOROUS - - FILL -	0'0	
		1'6	1 - 1 - 1
5.0'	FINE TO MEDIUM SAND SOME SILT TRACE OF FINE GRAVEL	5'0	
		6'6	10 - 10 - 8
		10'0	7 - 7
11.0'	VERY FINE SAND & SILT	11'0	
		11'6	6
13.0'	FINE TO COARSE SAND SOME FINE TO COARSE GRAVEL TRACE OF SILT	15'0	
		16'6	12 - 21 - 32
		20'0	
21.5'		21'6	33 - 28 - 20

BOTTOM OF BORING 21.5'

- REQUIRED DEPTH -

BORING NO. 3

WATER	GROUND SURFACE		
0.0'	FINE TO COARSE SAND SOME FINE GRAVEL TRACE OF SILT - ODOROUS - - POSSIBLE FILL -	0'0	
		1'6	1 - 2 - 6
		5'0	
		6'6	10 - 12 - 13
10.0'	VERY FINE SAND & SILT	10'0	
		11'6	5 - 11 - 13
		15'0	
		16'6	5 - 6 - 7
18.0'	FINE TO COARSE SAND SOME CLAY LITTLE FINE TO MEDIUM GRAVEL	20'0	
21.5'		21'6	16 - 28 - 29

BOTTOM OF BORING 21.5'

- REQUIRED DEPTH -

NOTE - ARTESIAN CONDITION FROM 15' TO 21.5'

5 - 25 - 71

5 - 25 - 71

*INDICATES MUD LOST IN THIS LAYER OF SOIL FOOTAGE OF BORING THIS SHEET 43.0'

WATER READING INDICATES SURFACE OF WATER AT COMPLETION OF BORING UNLESS NOTED OTHERWISE. FIGURES IN LOG COLUMN INDICATE NUMBER OF BLOWS TO DRIVE 2" SPLIT SAMPLER 6 INCHES WITH 140 LB. WEIGHT FALLING 30 INCHES UNLESS OTHERWISE SPECIFIED.

SHEET 2 OF 2 FOREMAN AJ CLASSIFICATION BY AJ & RVD RIG JOB NO. B-5194